Assembly Drawings ..... B 10.1

Bilingual Drawings ..... B 1.9
Brackets-Design Recommendations ..... A 6.6.2

CAD (General)
- Drawing Conventions ..... B 2.5
- Plot Size ..... C 5.10

Change Circles ..... B 3.3
Charts ..... B 6.1-6.4.2
- Figure Sheets ..... B 6.3
- General ..... B 6.1-6.1.1
- Grid Sheets ..... B 6.4-6.4.1
- Main Sheets ..... B 6.2

Clearance
- Between Movable Parts ..... A 11.1
- For Orbital Spinning ..... A 11.1

CN ..... B 1.1
CR ..... B 1.1
"D" Holes
- Positioning on Drawing ..... B 10.1

Design Check List ..... B 1.1
Design Level Identifier (DLI)
- General ..... B 3.6-3.7
- Part Numbers ..... C 8.1-8.1.1
- Production Release of Earlier Design Level ..... B 3.11
- Recording No Prior DLI Drawing ..... B 3.12
- Recording Prior DLI Hand Marked Drawing ..... B 3.11
- Recording Revision at Production Release ..... B 3.8.6, 3.9.8.1
- Revision Records, Single Sheet Drawing ..... B 3.8-3.8.6
- Revision Records, Multi-Sheet Drawing ..... B 3.9-3.9.11
- Revision Records, Chart Drawing ..... B 3.10-3.10.3

Development Stage Parts ..... B 7.2
Development Release ..... B 2.1
Die Casting ..... B 4.1-4.1.3
- Scale on Drawing ..... B 10.1

Dimensioning
- Beads ..... B 9.1-9.1.1
- Coining ..... B 9.1.2
- Draft ..... B 9.1.5
- Duplicate Dimensioning ..... B 9.1.8
- Electrical Terminals ..... B 9.1.7
- Foreshortened Dimensions ..... B 9.1.4

Dimensioning (continued)
- Machined Holes ..... B 9.1.1
- Non-geometric Positional Tolerance ..... B 9.1.8
- Port Punching ..... B 9.1.6
- Port Punching ..... B 9.1.6
- Radii with Specified Centers ..... B 9.1.7
- Reference Dimensions ..... B 9.1.3
- Tolerances ..... B 9.1.2
- Threads ..... B 9.1.4

Drawing Date ..... B 2.1
2.2, 6.1
Drawing Scale ..... B 10.1
Drawing Names ..... B 1.8
Dual Language Drawings ..... B 1.9

EMI ..... B 10.2
Experimental Layouts ..... B 7.1

Fillet Radius, Minimum ..... A 11.1
First Used ..... B 2.2
Format, Drawing ..... B 1.7.5-1.7.7

General Rules, Design ..... A 11.1
General Rules, Drafting ..... B 10.1
Geometric Dimensioning and Tolerancing
- Examples ..... B TBD
- Gaging ..... B 5.2-5.2.3
- General Information ..... B 5.1

Glossary ..... B 1.1
GM TOPS ..... B 1.1

Identification ..... B 1.5

Key Product Characteristics (KPC) ..... B 1.7.6

Lettering and Line Convention ..... B 2.3-2.3.3
- Identification of Points, Holes, etc. ..... B 2.3.1
- Metric Drawings ..... B 2.3.3
- Parting Lines ..... B 2.3.3
- Section Letters ..... B 2.3.1

Lettering and Line Convention (continued)
- Variables ..... B 2.3
- View Indicators ..... B 2.3.2

Lever, Throttle-Design Recommendations ..... A 6.6.2
Lost Drawings ..... B 2.2

Machining
- Drilled Holes ..... A 5.1

Notes (See Standard Notes)
NX
- Draft and Blends ..... C 4.0.1-4.0.2
- Drawings ..... C 4.0.1
- Non-Physical Change ..... C 4.0
- Other Requirements ..... C 4.0
- Part File Organization ..... C 4.0
- Reducing Number of Sheets in Dwg ..... C 4.0.1
- Site Defined Reference Sets ..... C 4.2
- Springs and Screw Threads ..... C 4.0
- User Checklist ..... C 4.1-4.1.2

Obsoleting Drawings ..... B 3.4-3.4.2
Orbital Spinning Clearance ..... A 11.1
Outline Drawings, Product ..... B 4.1-4.1.3, 10.1

Part Numbers ..... C 8.1-8.1.1
PEM ..... B 1.1
Process Level Suffix (PLS) ..... B 7.2
Production Release ..... B 2.1-2.1.3
- Customer Drawings from Outside the Corp. ..... B 2.1.3
- DLI Drawings (SPN) ..... B 2.1.1,3.8.4-3.11.2
- EMI's ..... B 2.1.2
- Experimental (RP Numbers) ..... B 2.1.1
- GM or other Delphi Division Drawings, Releasing ..... B 2.1.2
- Service Drawings ..... B 2.1.3
- Tooling Released Drawings ..... B 2.1.4
- Understudy Released Drawings ..... B 2.1.4

Properties, Part ..... B 2.6
Prototype Release ..... B 2.1
Prototype Stage Parts ..... B 7.2
Quality/Customer Interface Characteristics ..... B 1.7.6
Recording Drawing Revisions ..... B 3.2-3.2.8, 3.8-3.10.4
Reinstating Drawings ..... B 3.5
Revision History Retention ..... B 1.7.7

Saturn Corporation ..... B 4.1.5
Scrolling of Revision Record (DLI) ..... B 3.7

Sheet Metal Stamping
- Bow ....A 6.4
- Coining ....A 6.2
- "D" Holes ....A 6.2, 6.7-6.7.5
- Design Recommendations ....A 6.6.2
- Grain Direction ....A 6.5
- Levers ....A 6.6-6.6.2
- Punch Direction ....A 6.3
- Thickness of Material ....A 3.1.2, 6.1
- Tolerances ....A 3.1.1, 6.4
- Valves ....A 6.4

Signatures on Drawings ....B 2.1, 2.2,6.1
Springs, Compression ....A 8.1-8.1.5
Springs, Torsion ....A 8.3-8.3.4

Standard Notes
- Adjustable Tang ....B 1.4
- Asm and Test Information Only ....B 1.4.2
- Hole Number Symbol ....B 1.4.2
- Identification, Product ....B 1.4.2
- Links ....B 1.4
- Radial Location of Diamond Groove ....B 1.4.2
- Section on Another Sheet ....B 1.4.1
- Shaft and Lever Assemblies ....B 1.4
- View on Another Sheet ....B 1.4.1

Symbols
Hole Number/Feature Number ..... B 1.3
Material Identification ..... B 1.3

Threads, Inch ..... A 9.1-9.1.1
Threads, Metric ..... A 9.2-9.2.8
Tolerance Guide ..... A 3.1-3.1.2
Punch Press Parts ..... A 3.1.1
Screw Machine Parts ..... A 3.1
Strip Stock Thickness ..... A 3.1.2
Tolerance-Method of Showing on Drawing ..... B 9.1.2

Wall Thickness ..... A 11.1

Zero Line Dimensioning ..... B 8.1-8.1.3

TOLERANCE GUIDE

The purpose of this standard is to establish a tolerance guide for use in design drafting to maintain tool and production cost at a point consistant with parts which will operate functionally in the end product. Because of performance requirements it will be necessary to use closer tolerances in some cases - these cases should receive careful study to keep cost at a minimum.

A. Screw machine parts:

1.	cut-off length	± 0.12 mm (.005 in.)
2.	slot depth	± 0.25 mm (.010 in.)
3.	sloth width	± 0.12 mm (.005 in.)
4.	slot locations	± 0.25 mm (.010 in.) of centerline
5.	reamed hole	± 0.02 mm (.001 in.)
6.	drilled hole diameter	± 0.05 mm (.002 in.) based on standard drill size (ref GM Standards)
7.	slab cut	length ± 0.5 mm (.02 in.) thickness ± 0.12 mm (.005 in.)
8.	turn (outside diameter)	± 0.064 mm (.0025 in.)
9.	cross drill angle	± 1 °
10.	end drill depth	± 0.25 mm (.010 in.)
11.	surface finish	3.2 (125) typical (for symbology, see GM Standards)
12.	cut-off projection	if permissible, indicate which end
13.	centerless grinding (outside diameter)	± 0.012 mm (.0005 in.)

When printed, this document is uncontrolled.

TOLERANCE GUIDE

B. Punch press parts:

1. primary operations

a.	blank shape	± 0.5 mm (.02 in.) on non-functional surfaces
b.	punched holes	± 0.05 mm (.002 in.) preferred
c.	bend location	± 0.25 mm (.010 in.) minimum - more if possible according to product design
d.	bend radii	inside radius not less than metal thickness, not more than 2 1/2 times thickness generally (see GM Standards)

2. secondary operations

a.	shaving shape	± 0.02 mm (.001 in.) minimum
b.	trimming and notching	± 0.25 mm (.010 in.) minimum - indicate operating surface if known at design stage

3. surface finish — 2.0 (80) minimum typical (see GM Standards)

When printed, this document is uncontrolled.

TOLERANCE GUIDE

C. Standard thickness chart of coiled cold rolled strip stock for selecting material size. Specify thickness on drawing per Section B, pg. 9.1.2, paragraph D.

NOMINAL mm	TOLERANCE	INCH EQUIVALENT
0.12	+ 0.11 - 0.00	.0047
0.25	+ 0.12 - 0.00	.0098
0.40	+ 0.12 - 0.00	.0157
0.50	+ 0.13 - 0.00	.0197
0.80	+ 0.16 - 0.00	.0315
1.00	+ 0.18 - 0.00	.0394
1.20	+ 0.18 - 0.00	.0472
1.60	+ 0.18 - 0.00	.0630
2.00	+ 0.18 - 0.00	.0787
2.20	+ 0.18 - 0.00	.0866
2.30	+ 0.18 - 0.00	.0906
2.60	+ 0.18 - 0.00	.1024
3.00	+ 0.18 - 0.00	.1181
3.20	+ 0.18 - 0.00	.1260
4.00	+ 0.18 - 0.00	.1575

NOMINAL INCHES	TOLERANCE
.005	+ .004 - .000
.010	+ .005 - .000
.015	+ .005 - .000
.020	+ .005 - .000
.030	+ .006 - .000
.042	+ .007 - .000
.049	+ .007 - .000
.062	+ .007 - .000
.078	+ .007 - .000
.088	+ .007 - .000
.093	+ .007 - .000
.104	+ .007 - .000
.120	+ .007 - .000
.125	+ .007 - .000
.156	+ .007 - .000

For design use on drawings and stackups of unlisted sizes, add 0.08 mm (.003”) to the recommended plus tolerance, as outlined in GM-6160M to allow for manufacturing forming use.

DIE CASTING

The following standards are meant to be guidelines for designing die castings.

1. Datum features should be provided on both sides of the parting line. The centerline through these features must be within 0.125 mm (.005”) in any direction for cavity shift.

2. Where possible, design the part for straight parting line.

3. Design parting lines to provide suitable sections for trimming the gates, overflows, etc.

4. Provide suitable gate location for Tool Engineering (a large flat entrance).

5. Plan heavy sections normal to or parallel to the parting line to allow for coring.

6. Provide lightener cores, whenever possible, to minimize porosity and cost.

7. Provide for adequate metal flow for filling interior.

8. Eliminate blind pockets in the mold wherever possible. (If not possible, provide for ventiing or filling.)

9. Avoid casting contours which produce knife edges or extremely thin die steel conditions.

10. Provide adequate tolerances in non-critical areas.

11. Wherever possible, allow for a maximum draft of 2° in zinc and 3° in aluminum.

12. Provide uniform wall thickness, 1.65 ± 0.15 mm (.065 ± .006”) for zinc and 2.50 ± 0.15 mm (.098 ± .006”) for aluminum.

13. Provide 2.3 mm (.09”) minimum wall between areas that will be cross drilled in the finish operation. If possible, provide 3.0 mm (.12”).

14. Where possible, provide 4.8 mm (.19”) minimum wall around throttle bores.

15. Provide 0.8 mm (.03”) minimum (worse condition) stock on all surfaces to be machined.

16. Allow for generous fillet radii, 1.5 mm (.06”) in zinc and 3.0 mm (.12”) in aluminum.

17. The minimum diameter for a cored hole is 3.0 mm (.12”). The maximum depth is three times the diameter.

18. Choke and air valve sections should be cast from one side, if possible, to avoid mismatch and minimize tool costs.

DIE CASTING

19. Provide, 0.18 - 0.25 mm (.007 - .010”) high by 90° included angle, gasket seal beads for zinc castings and some aluminum castings.

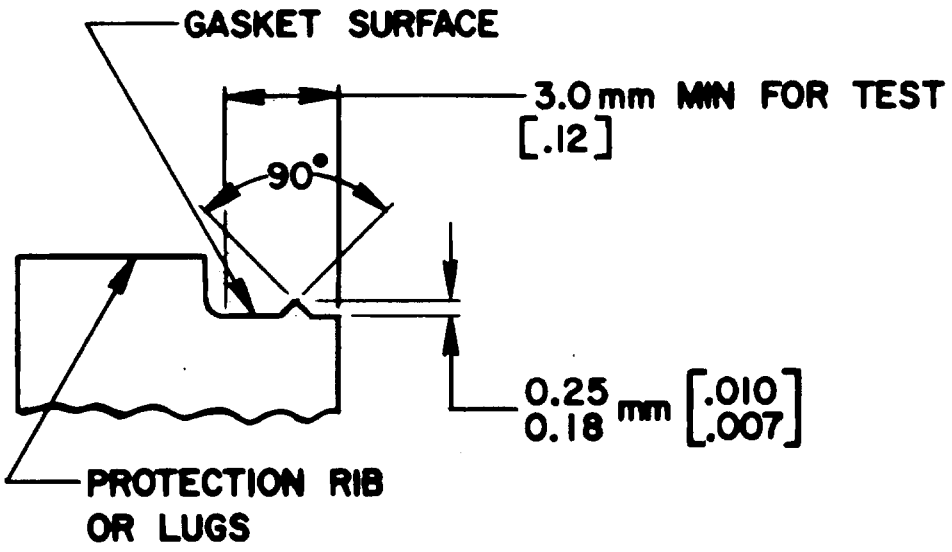

20. Provide, 0.25 - 0.35 mm (.010 - .014”) high by 120 ° included angle, gasket seal beads for aluminum castings.

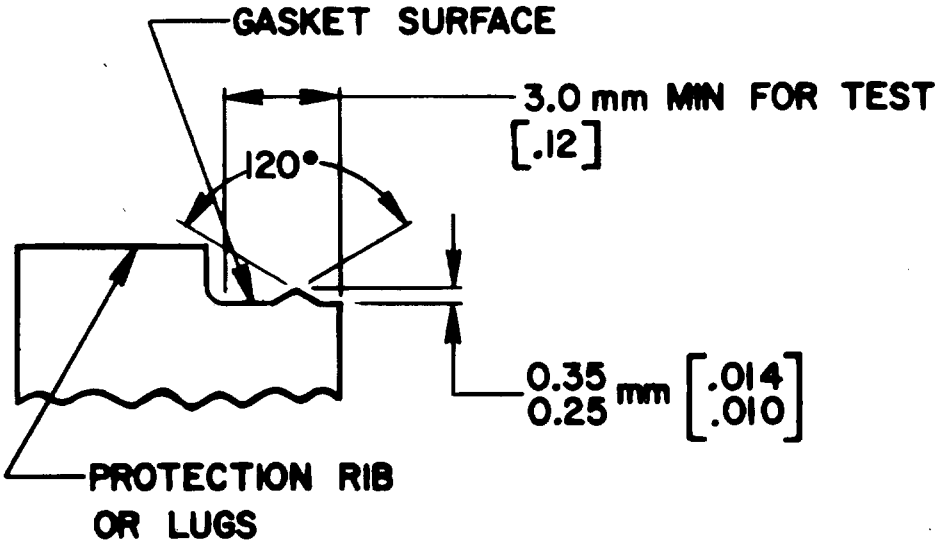

DIE CASTING

21. Provide a counterbore and drill point on aluminum castings where a tapped hole will be required.

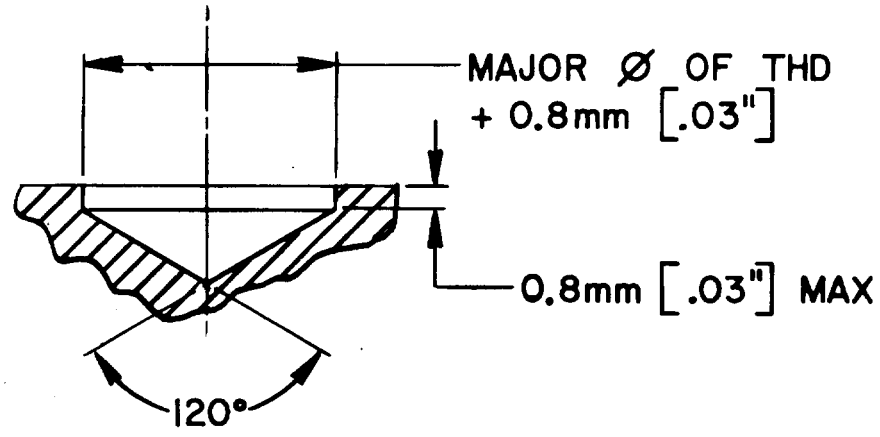

22. A counterbore for an expansion plug requires a 6° cast angle at the base of the hole as shown below.

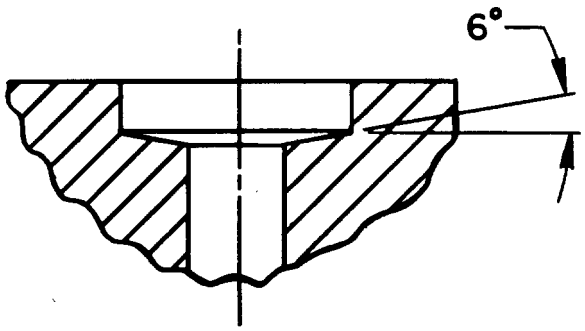

When printed, this document is uncontrolled.

DIE CASTING

23. The recommended practice for dimensioning angles is shown in ASME Y14.5M-1994, Figure 2-14.

24. Geometric Dimensioning and Tolerancing with MMC bonus tolerances should be avoided. Where applicable, GD & T should be used RFS. Examples:

For a cored hole that will be machined:

⌖	Ø X.XX	A	B	C

For a feature that will be used as cast:

⌖	Ø X.XX Ⓜ	A	B	C

MACHINING

A. Drilled holes

1. Use standard drill sizes and tolerances wherever possible.

2. The standard drill point angle of 118 degrees found in the Machinery's Handbook with a tolerance of +/- 2 degrees is acceptable. When the use of a drill point is required by functional design, the drill point must be dimensioned.

3. The normal drill depth, per pass, is four times the hole diameter. A larger diameter hole can therefore be machined deeper at the same cost.

4. Hole depths greater than ten times the hole diameter present difficult chip removal problems and should be avoided if possible.

5. Avoid drilling holes less than .030" (0.75 mm) in diameter.

6. Provide starting and breakout surfaces perpendicular to the drill centerline, where possible.

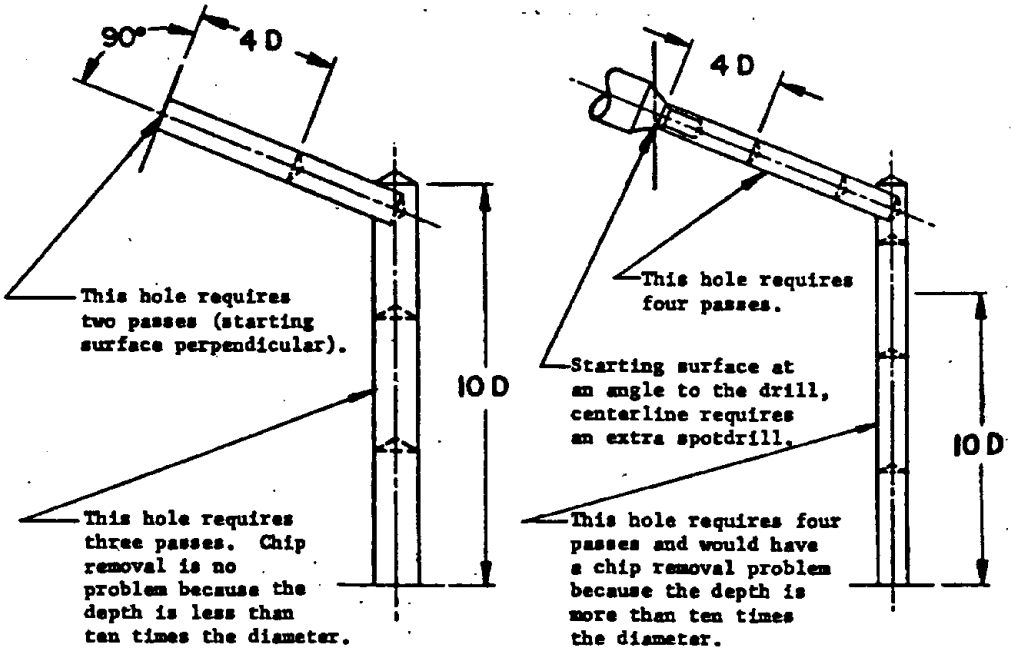

SHEET METAL STAMPING

A. Thickness of material

1. Use adequate stock thickness to minimize distortion during assembly, setting, or handling.

2. Avoid holes less than 1.5 times the stock thickness.

3. Provide at least 1.5 times the stock thickness around holes.

4. Bend and corner radii should be a minimum of stock thickness.

5. The width of formed tabs should be at least 2.5 times the stock thickness.

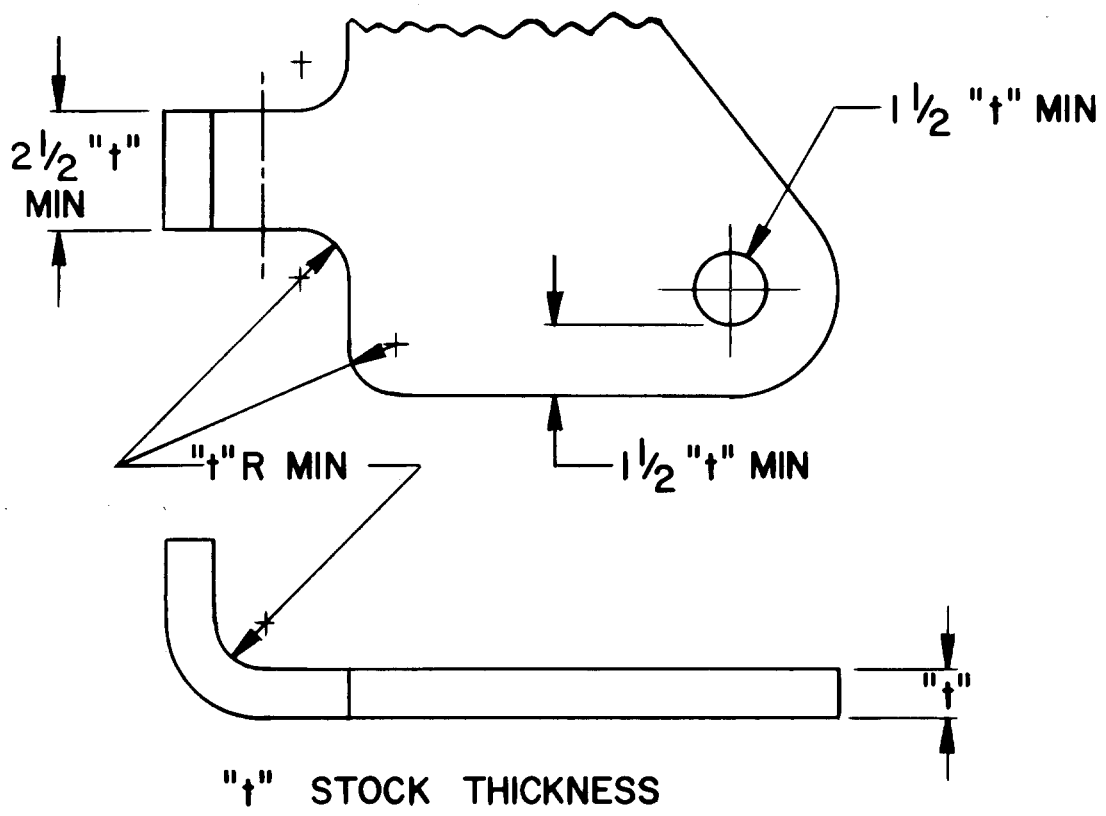

SHEET METAL STAMPING

B. Coin critical edges (including holes) to minimize burr problems.

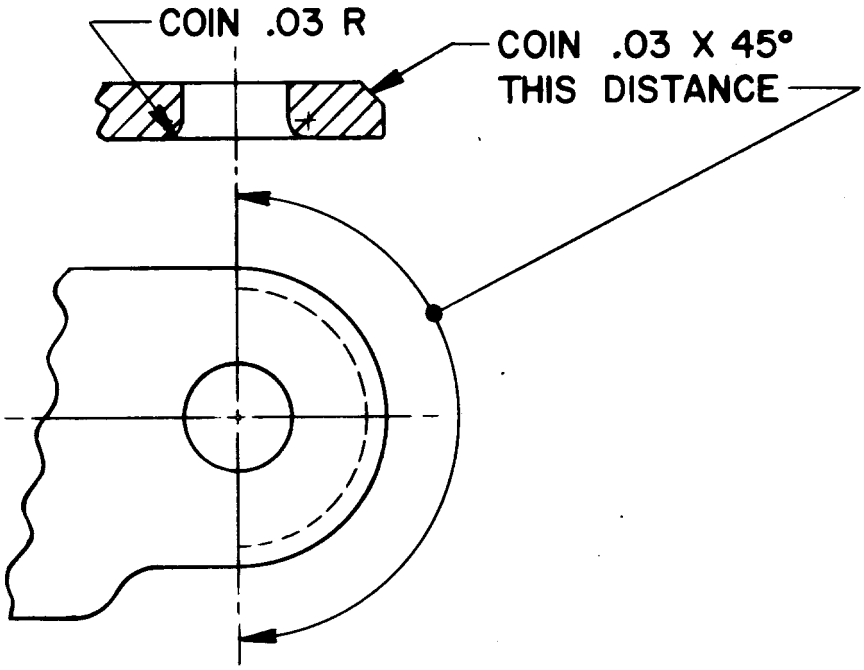

C. For all shaft holes in levers, see the series of pages in this section entitled DOUBLE D-HOLES AND SHAFTS.

SHEET METAL STAMPING

D. The punch direction for levers should be specified to assure that the shaft (or stud) shoulder side is clear of burrs for proper assembly. This should be done by one of the following methods.

NOTE: PUNCH DIRECTION MAY BE AFFECTED BY MATERIAL HARDNESS. PROCESS/TOOLING ENGINEERING SHOULD BE CONSULTED PRIOR TO SELECTION OF PUNCH DIRECTION.

1. On levers without “U” bends:

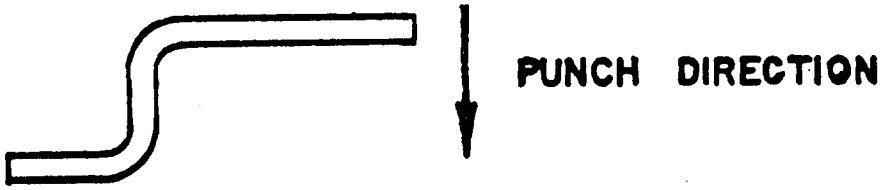

2. On levers with “U” bends:

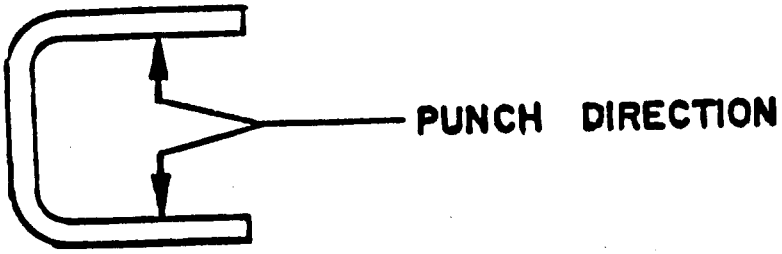

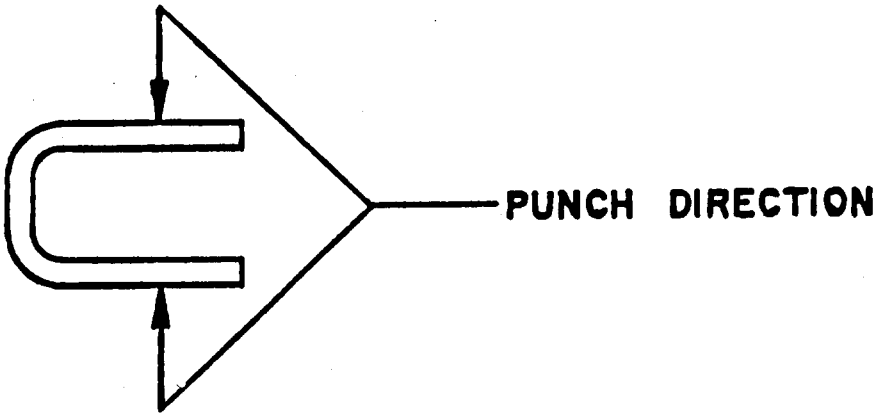

When printed, this document is uncontrolled.

SHEET METAL STAMPING

E. Tolerances less than 0.01 mm (.0004) usually require a secondary shave operation. This tolerance is acceptable but should be avoided if possible.

F. Specify maximum bow for levers mounted adjacent to each other, but actuated independently, to assure proper clearance.

G. Valves

1. Provide dimples on choke, throttle, and air valves (also similar parts) having large flat surfaces.

2. Provide a coined grid pattern to assure flatness of large surfaces, when required.

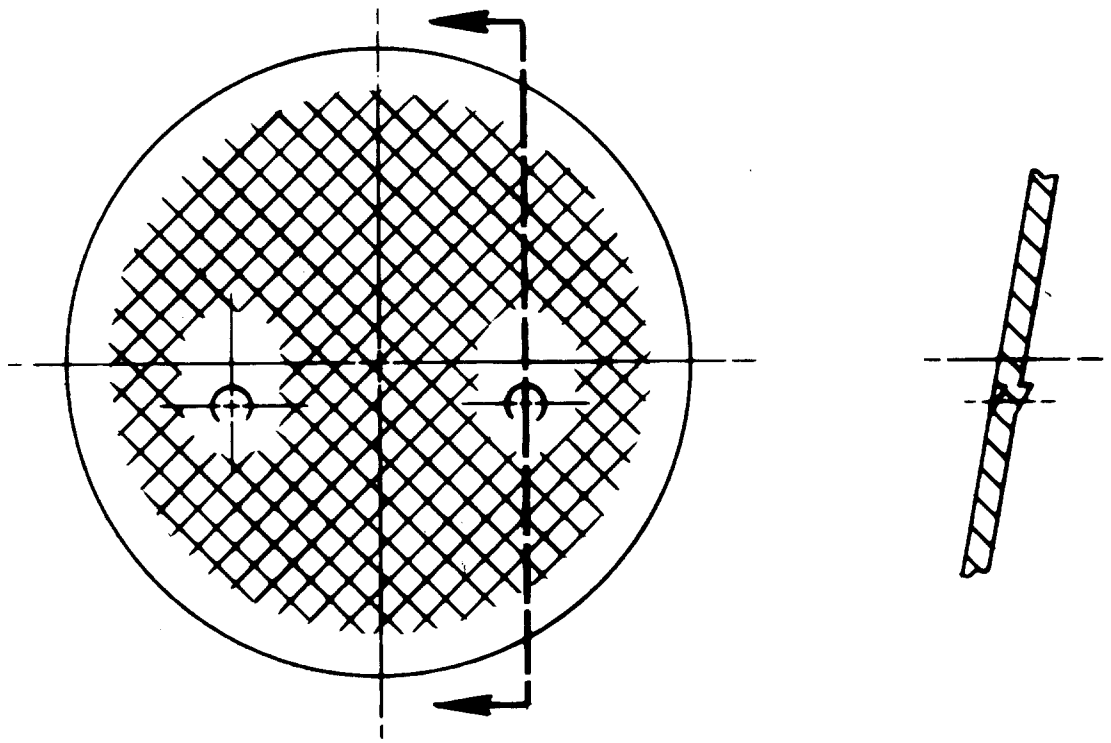

SHEET METAL STAMPING

H. Grain Direction

1. When adjustable bends are required on levers, use EMI-59 to specify the grain direction. (The same note used to indicate the adjustability will also cover the grain direction.)

2. On all throttle levers released for the 1976 model year and forward (except those covered by paragraph H.1.), the grain direction must be specified as follows:

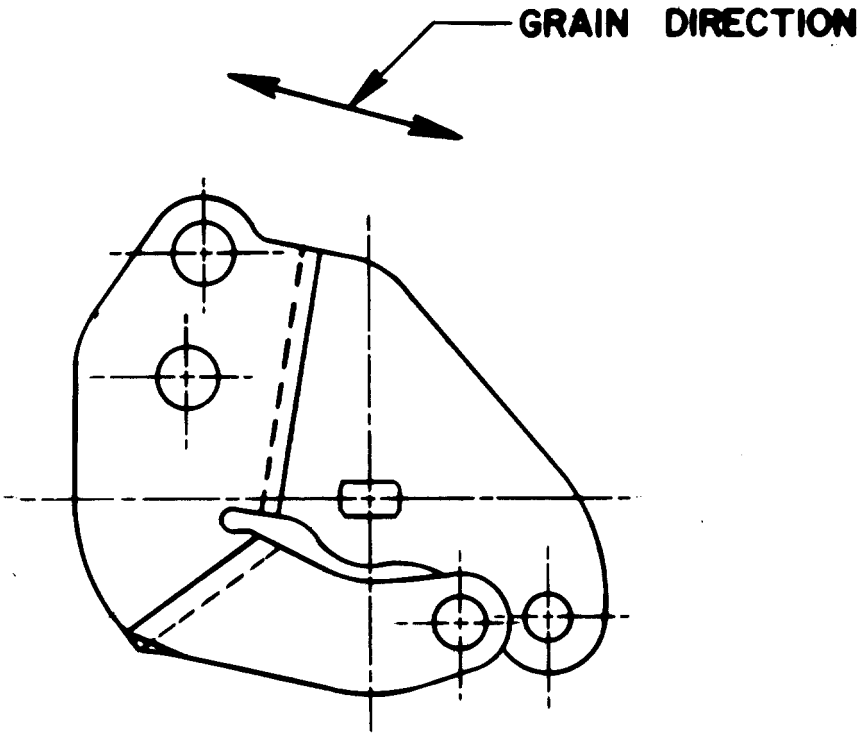

3. On levers with more than one adjustable bend, not in the same direction, the grain direction must be specified as shown in paragraph H.2., and in addition EMI-59 must be indicated for the adjustability.

When printed, this document is uncontrolled.

SHEET METAL STAMPING

1. Formulas for calculating levers that use links with 90° bends.

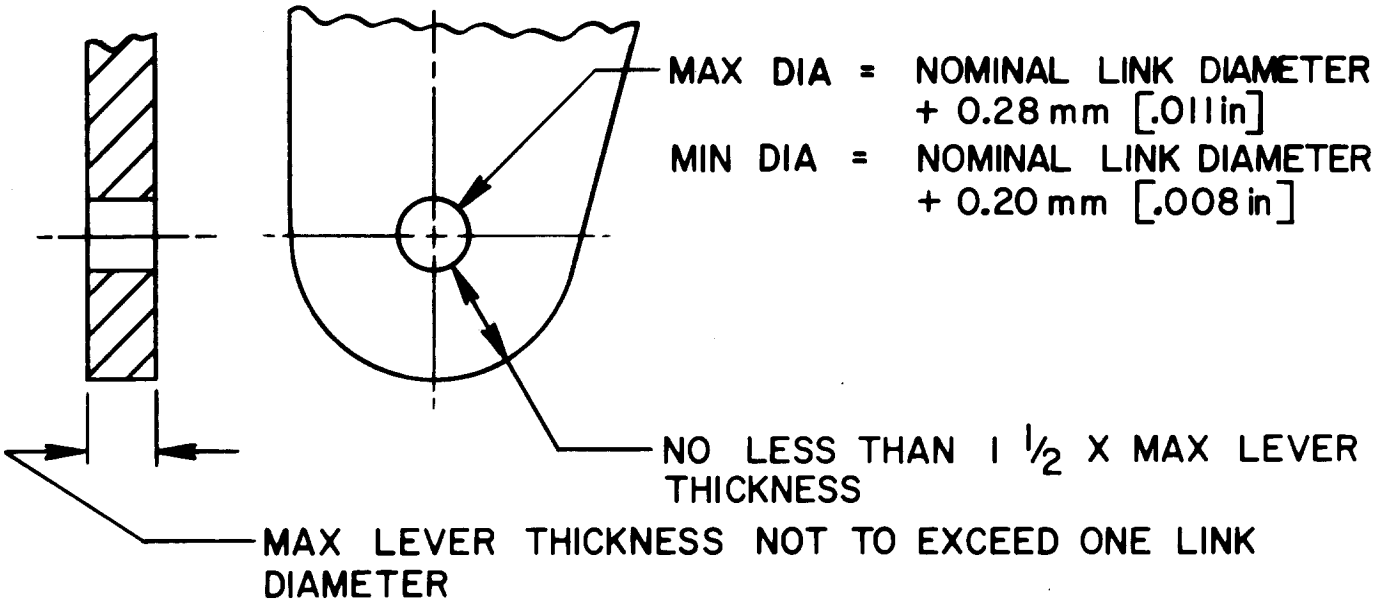

2. Formulas for calculating the keyhole in levers that use links with squirts.

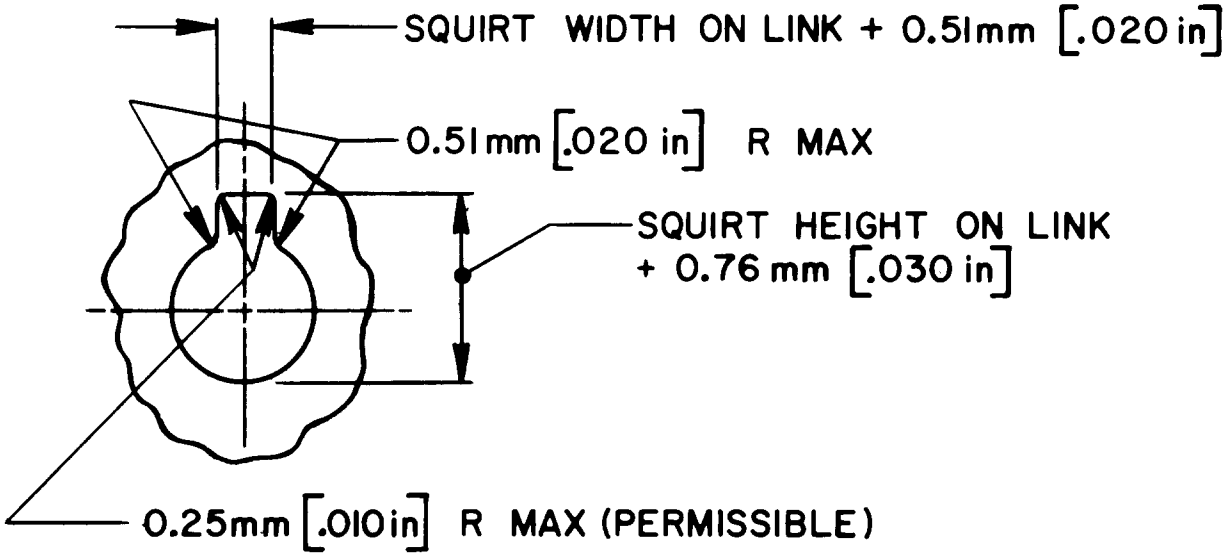

When printed, this document is uncontrolled.

SHEET METAL STAMPING

3. Formulas for calculating levers that use links with “S” or “U” bends.

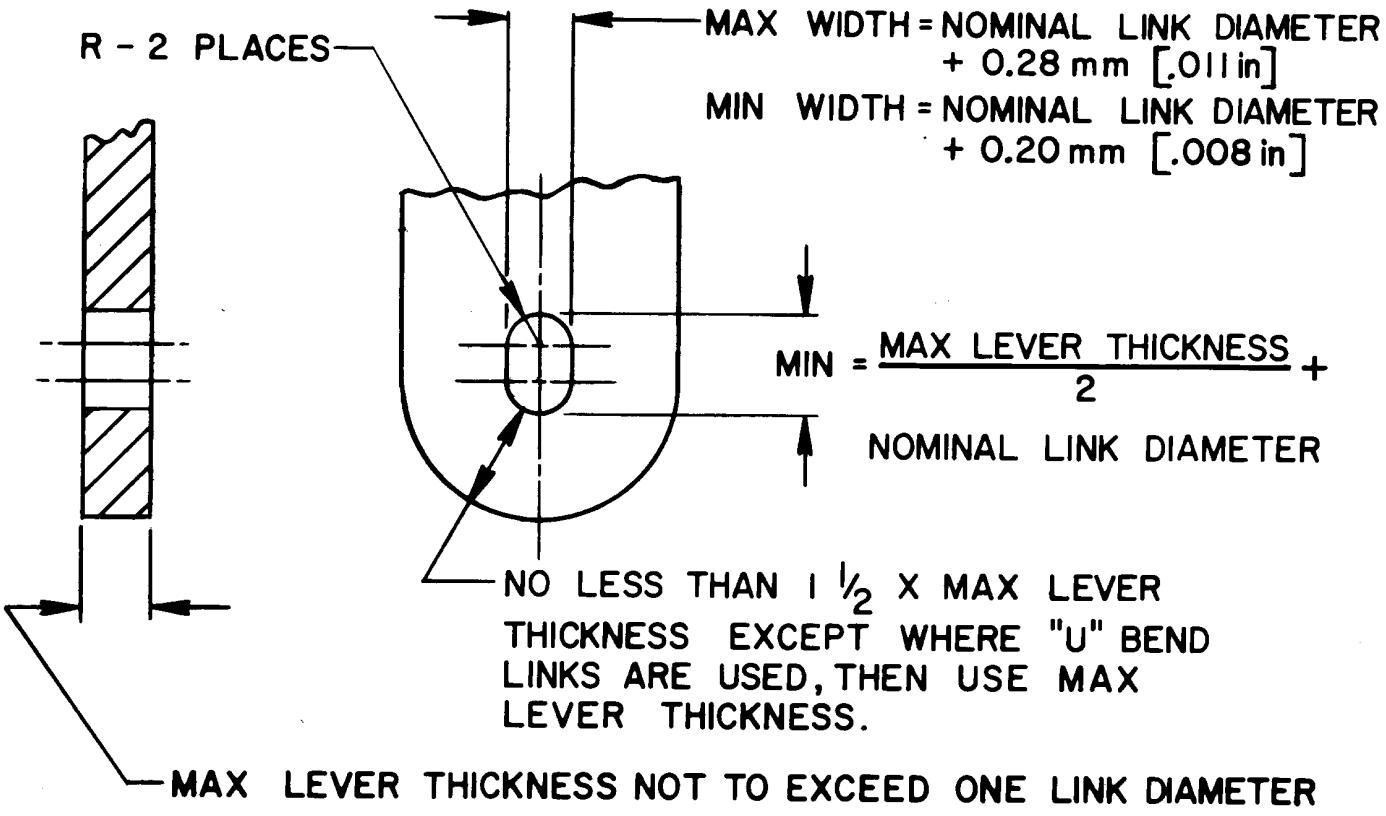

When printed, this document is uncontrolled.

SHEET METAL STAMPING

(RECOMMENDATIONS)

LEVERS & BRACKETS:

1. Grain direction should be approximately as shown below.

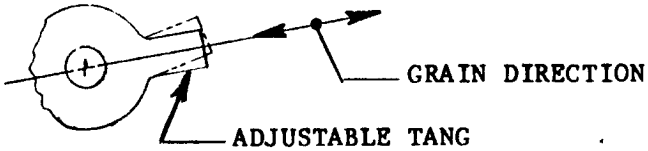

2. Locational tolerance for holes is ±0.254 mm min. per bend in lever.

   Example:

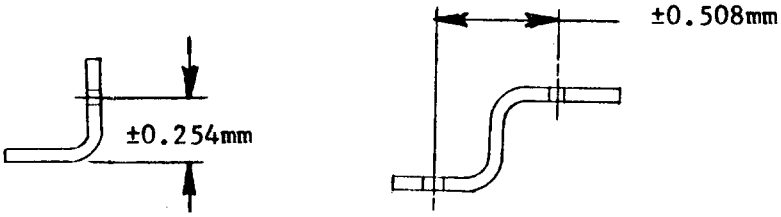

3. All bends must be shown in true view.

4. Non-critical peripheral edge tolerance should be ±0.5 mm.

5. Punched holes will be true size for only 1/2 to 1/3 stock thickness. The remainder will be larger in size with a rough surface.

6. Min. bend radius should be material thickness. Max. bend radius should be 3 times material thickness.

7. If a double bend 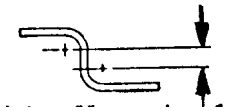 is required, a flat section between radii is preferred. This flat should be as large as possible.

8. Width of tangs should be at least 2 times material thickness.

9. Slots or narrow cuts should be 1.5 to 2 times material thickness.

10. All bends should have a uniform width of material at the bend.

    Example:

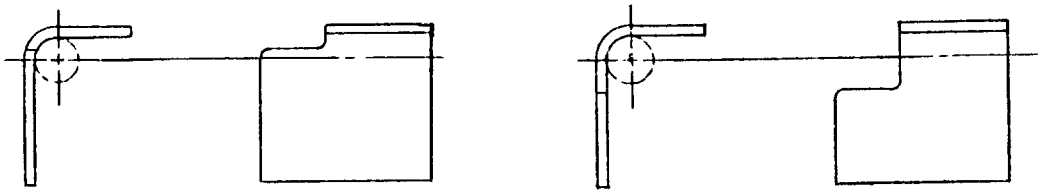

NOT RECOMMENDED RECOMMENDED

DOUBLE D-HOLES AND SHAFTS

General notes pertaining to the pages that follow in this series:

1. Part numbers and dimensions given are for reference. They are to be used as guidelines, or examples, for future designs.

2. When selecting a double D-hole size, use the following guidelines:

   a. The double D-hole in the lever is made with a punch and, therefore, requires new tooling for each hole size. Existing punches can be reused extensively.

   b. The double D-hole configuration on the shaft is produced on a screw machine along with other features on the shaft. Therefore, changing this configuration does not require extensive tooling changes.

   c. Because of the above tooling considerations, the double D-hole in the lever should prevail. THE CONFIGURATION OF SHAFTS SHOULD BE REWORKED TO FIT EXISTING DOUBLE D-HOLES USED IN LEVERS. This will also minimize the number of double D-hole punches required.

3. The relationship between lever and shaft (amount of interference or clearance) should be determined by the specific design requirements of each case. The examples given must be evaluated as to whether they suit a particular design.

4. Changes in part numbers or dimensions, and additional part numbers, should be reported to drafting supervision.

5. Unless otherwise specified: one place decimal dimensions ±0.3, two place decimal dimensions ±0.15.

6. For dimensioning shafts also see pages D-5.1.4 and D-5.1.5.

7. For dimensioning double D-holes also see page D-5.1.

When printed, this document is uncontrolled.

DOUBLE D-HOLES AND SHAFTS

THROTTLE SHAFT AND LEVER ASSEMBLIES

Part numbers and dimensions given are for reference. They are to be used as guidelines, or examples, for future design.

SHAFT DIA = 7.879 ± 0.025					
ASSEMBLY	SHAFT	FIRST LEVER ASSEMBLED	SPACER	THK	SECOND LEVER ASSEMBLED
17073336	17073288	17073289	17073290	10.05	17072973
17077806		17075937	17075938	9.48	17077808
17077272	17077273	17073289	17077274	5.11	17077983

SHAFT DIA = 9.47 ± 0.03					
ASSEMBLY	SHAFT	FIRST LEVER ASSEMBLED	SPACER	THK	SECOND LEVER ASSEMBLED
17071377	17064953	17064954	17064955	4.0	17071379
17071410		17077323			17071412
17075907					17071379
17075908					
17077322					
17077679					17077681
17073076	17074509	17071683			17073078
17075139					
17075183	17075184	17075807 TPS	—	—	—
17075929	17075380	17075801 TPS	—	—	—
17075777	17075933	17075934	17075936	9.35	17080034
17077861	17075993		17075994	4.38	17075992
17077580	17077581	17075801 TPS	—	—	—

When printed, this document is uncontrolled.

DOUBLE D-HOLES AND SHAFTS

Dimensioning Double D-Holes.

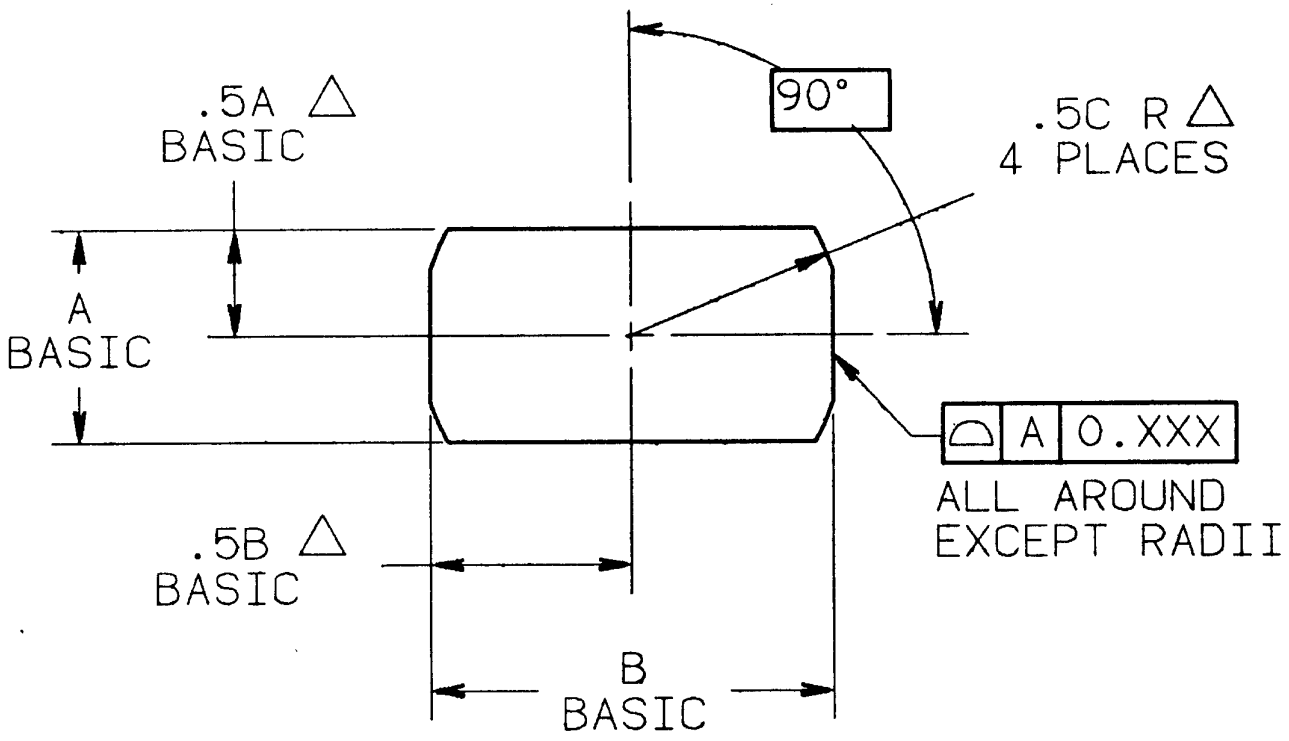

MINIMUM ALLOWABLE PROFILE TOLERANCE IS 0.025

SEE SEPARATE PAGE FOR VARIABLE VALUES A,B, AND C

△ = SEE SECTION "D" PG. 3.1.1

DOUBLE D-HOLES AND SHAFTS

DOUBLE D-HOLE DIMENSIONS

Part numbers and dimensions given are for reference. They are to be used as guidelines, or examples, for future design.

	LEVER	LEVER THK	A (BASIC)	B (BASIC)	C	SHAFT DIA
THROTTLE LEVERS	17072973	3.09 ± 0.09	4.553	7.9375	8.435	7.879 ±0.025
	17077808					
	17077983					
	17073289	2.355 ± 0.055	4.97	8.005	8.505	
	17075937					
	17075802	3.09 ± 0.09	5.325	8.025	8.125	9.47 ±0.03
	17075803					
	17075918					
	17077447					
	17071379		5.79	9.525	10.025	
	17071412					
	17073078					
	17075992					
	17077681					
	17080034					
	17064954	2.355 ± 0.055	6.21			
	17071683					
	17075934	3.09 ± 0.09				
	17077323	2.355 ± 0.055				
TPS LEVERS	17059084	1.69 ± 0.09	4.735	7.9625	8.275	7.879 ±0.025
	17059350		5.985	9.545	9.875	9.47 ±0.03
	17059607					
	17071758					
	17075935					
	17075801	2.09 ± 0.09				
	17075807					

DOUBLE D-HOLES AND SHAFTS

SHAFT DIMENSIONS FOR LEVER DOUBLE D-HOLE

Part numbers and dimensions given are for reference. They are to be used as guidelines, or examples, for future design.

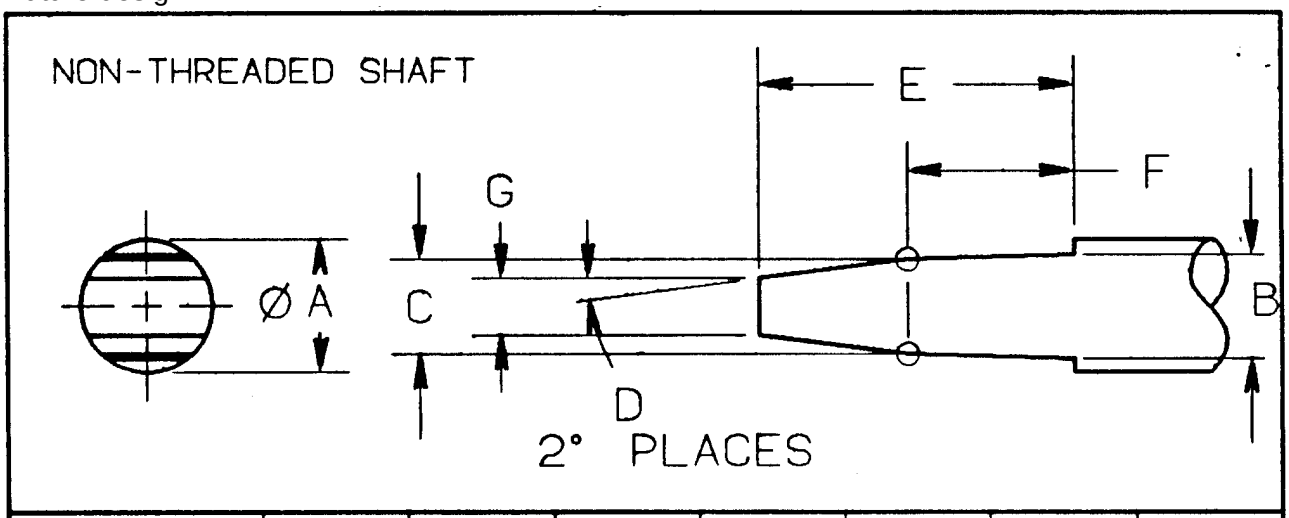

SHAFT	A	B	C	D	E	F	G
17073288	7.879 ±0.025	5.07 ±0.04	4.828 ±0.038	2° 42′ REF	17.42	10.82	4.205 ±0.035
17077273					12.48	5.88	
17064953	9.47 ±0.03	6.31 ±0.04	6.07 ±0.04	2° 48′ REF	11.34	4.91	5.44 ±0.04
17074509							
17075933					18.27	11.84	
17075993					13.36	6.76	

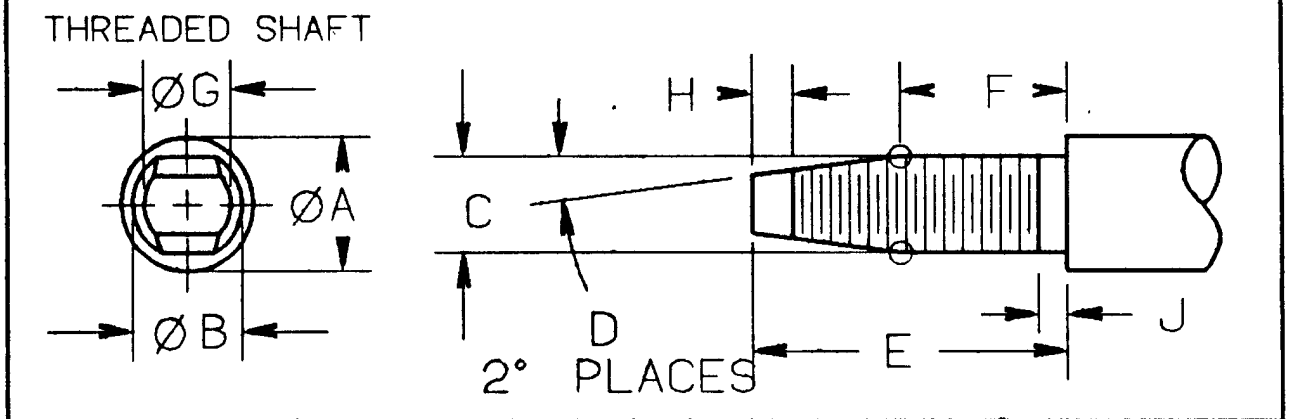

SHAFT	A	B	C	D	E	F	G	H	J
17075184	9.47 ±0.03	M8X1.00 6g	5.39 ±0.04	1° 45′ ±0° 30′	31.17	24.67	6.845 ±0.075	4.00	2.70
17075380									2.00
17077581					31.70	25.17			

SECTION A Pg. 6.7.4

When printed, this document is uncontrolled.

DOUBLE D-HOLES AND SHAFTS

SHAFT DIMENSIONS FOR LEVER DOUBLE D-HOLE

Part numbers and dimensions given are for reference. They are to be used as guidelines, or examples, for future design.

SCREW ATTACH

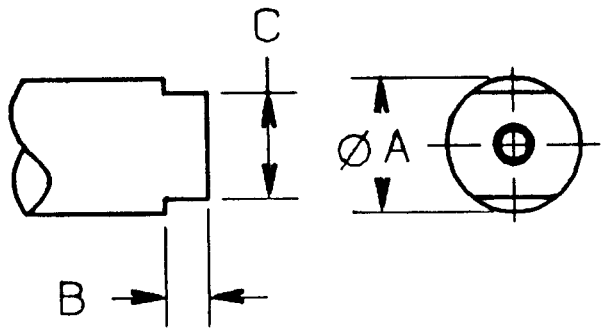

SHAFT	A	B	C	LEVER THK
17073288	7.879 ±0.025	1.25	4.805 ±0.025	1.69 ± 0.09
17077273				
17064953	9.47 ±0.03	1.15	6.07 ±0.04	
17074509				
17075933		2.05		
17075993				

SPUN ON

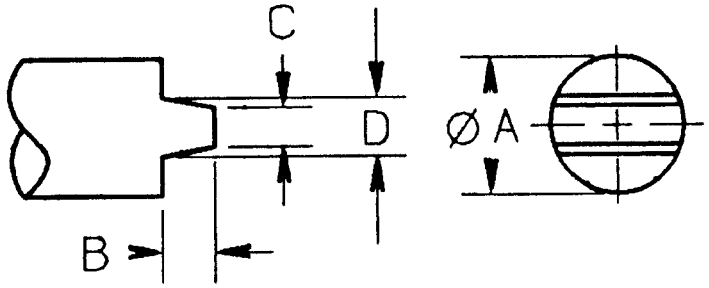

SHAFT	A	B	C	D	LEVER THK
17075184	9.47 ±0.03	3.20	5.78 ±0.06	6.06 ±0.04	2.09 ± 0.09
17075380					
17077581					

SPRING - COMPRESSION

LOAD REQUIREMENTS

1. FREE LENGTH _____ mm
2. INITIAL FORCE (P_1) _____ N AT _____ mm LENGTH (L_1)
3. FINAL FORCE (P_2) _____ N AT _____ mm LENGTH (L_2)
4. RATE _____ kN/m BETWEEN _____ AND _____ mm OR _____ mm BETWEEN _____ N (P_1) AND _____ N (P_2)

SERVICE REQUIREMENTS

5. SPRING MUST OPERATE A MINIMUM OF _____ X 10^6 CYCLES BETWEEN _____ mm AND _____ mm
6. MAXIMUM TEMPERATURE _____ C
7. MINIMUM LENGTH TO WHICH SPRING MUST BE DEFLECTED _____ mm

PHYSICAL REQUIREMENTS

8. WIRE DIAMETER _____ mm
9. ACTIVE COILS _____
10. MAXIMUM O.D. _____ mm FOR _____ mm DIAMETER HOLE
11. MINIMUM I.D. _____ mm FOR _____ mm DIAMETER SHAFT
12. TYPE OF ENDS _____
13. DIRECTION OF WINDING _____ HAND
14. ENDS NOT TO BE MORE THAN _____ FROM RIGHT ANGLE TO AXIS
15. MAXIMUM SOLID HEIGHT _____ mm

CALCULATED VALUES (ADVISORY)

16. WIRE DIAMETER _____ mm
17. MEAN DIAMETER _____ mm
18. ACTIVE COILS _____
19. RATE _____ kN/m
20. FREE LENGTH _____ mm
21. SOLID HEIGHT _____ mm
22. STRESS AT SOLID HEIGHT _____ MPa

DELPHI ENERGY & ENGINE MANAGEMENT SYSTEMS MUST BE NOTIFIED BEFORE SHIPMENT IF CALCULATED VALUES ARE NOT FOLLOWED.

SAMPLE MUST BE APPROVED BY PRODUCT ENGINEERING BEFORE PROCEEDING WITH PRODUCTION

LOAD REQUIREMENTS MUST BE MAINTAINED AFTER SERVICE REQUIREMENTS HAVE BEEN MET

When printed, this document is uncontrolled.

SPRING-COMPRESSION

The space at the top of the format is for a picture of the spring. The picture should be used only if needed to show special ends or other special dimensioning.

Tolerance should be applied to all dimensions to be held. Calculated dimensions are theoretical and should have no tolerances.

For most compression springs the following method of specification will be used:

A. Load Requirements

1. Two of the four items must be specified (never more than two).
   Exception: see alternate method of specifying springs.

2. If the spring is not too critical the free length and one load point may be defined.

3. If the spring is more critical, two load points may be desirable.

4. Rate should seldom be used and only when critical.

B. Service Requirements

1. Spring cycle value is to be specified according to application.

2. Item 7 indicates the most deflection the spring is likely to encounter. In some cases this may be deflection to solid height.

C. Physical Requirements

1. When load requirements and service requirements are specified, items 8 and 9 should not be specified.

2. Either or both item 10 and 11 must always be specified. The hole diameter in item 10 and the shaft diameter in item 11 should be specified if applicable.

3. Item 12 must always be specified by any of the following: open, open and ground, closed, closed and ground.

4. Item 13 must be specified by any of the following: right hand, left hand, or either hand.

5. In item 14 a reasonable tolerance to expect is ± 3 degrees. Closer tolerances can be held but should not be specified unless necessary.

6. In item 15 the maximum solid height must be specified. It must never be greater than the dimension shown in item 7.

When printed, this document is uncontrolled.

SPRING-COMPRESSION

D. Calculated Values

1. Items 16-22 should always be filled in and kept up to date with the specified requirements.

2. These items are not necessarily the actual dimensions of the spring and should not change to agree with a particular manufacturer's actual springs.

E. Alternate method of specifying springs

1. Occasionally when a spring is highly overstressed, or for any reason load points are impractical (e.g. idle needle springs), specify items 1 and 8 through 13.

F. Suggested design principles to prevent tangling

1. Use closed ends.

2. Use windings as closely spaced as possible.

3. Use preplated stock or material not requiring plating to prevent tangling during plating.

4. Make the shape and ends as simple as possible.

SPRING-COMPRESSION

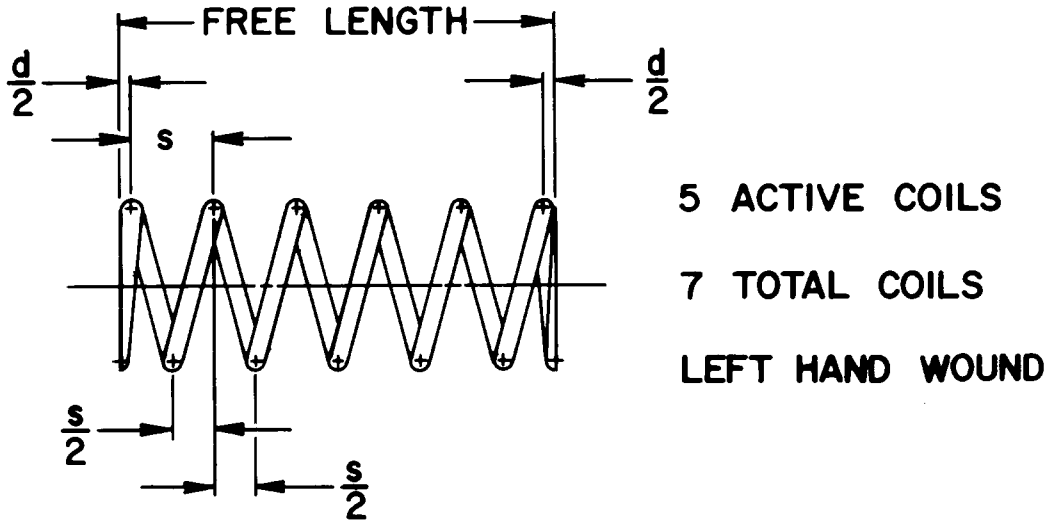

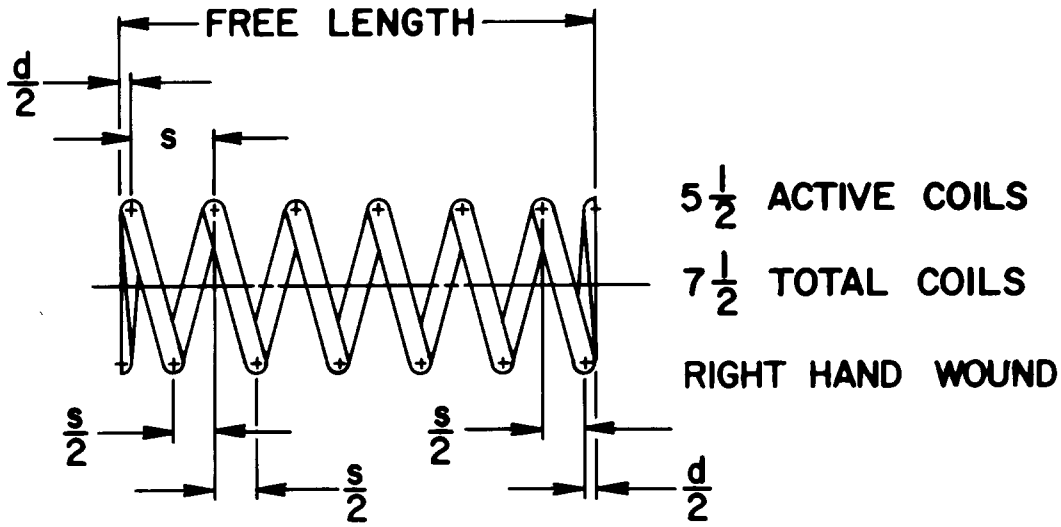

s = DISTANCE BETWEEN CENTERS OF COIL (NORMAL)

d = DIAMETER OF WIRE

$$s = \frac{\text{FREE LENGTH} - d}{\text{ACTIVE COILS}}$$

SPRING-COMPRESSION

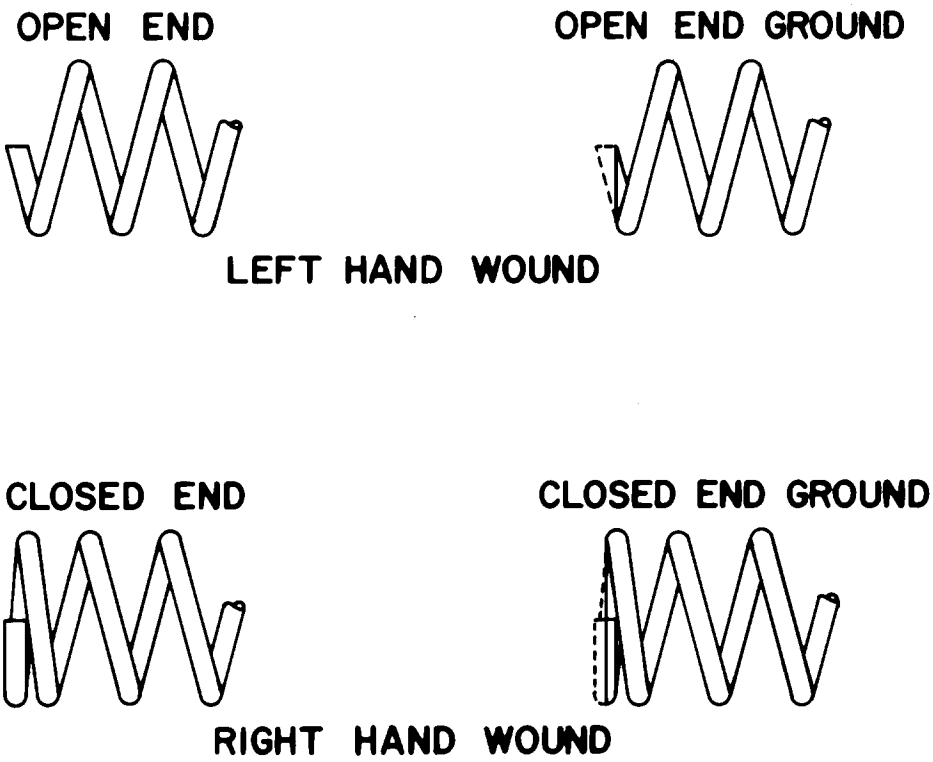

SPRING - TORSION

MANDATORY	ADVISORY		MANDATORY	ADVISORY	
		INITIAL MOMENT POSITION ANGLE - **A** FINAL MOMENT POSITION ANGLE - **B** FREE POSITION ANGLE - **C** LOAD APPLICATION POINTS - **L**			FOR DESIGN GUIDELINES, SEE DELPHI-E DESIGN DRAFTING STANDARDS SECTION ON TORSION SPRINGS
		1. INITIAL MOMENT _____ N·m AT POSITION **A**: ____DEG			11. WIRE DIAMETER _____ mm
		2. FINAL MOMENT _____ N·m AT POSITION **B**: ____DEG			12. MEAN COIL DIAMETER _____ mm
		3. RATE _____ N·m/DEG BETWEEN POSITIONS **A** AND **B**			13. NUMBER OF ACTIVE COILS _____
		4. FREE POSITION (NO MOMENT) **C**: _____DEG (REF. ONLY)			14. STRESS AT POSITION **B** _____ MPa
		5. COIL DIRECTION (R.H. OR L.H.) _____			15. MAXIMUM ALLOWABLE STRESS _____ MPa
		6. TO WORK IN _____ mm DIAMETER HOLE			16. PROCESS: _____
		7. TO WORK OVER _____ mm DIAMETER SHAFT			
		8. TO WORK WITHIN _____ mm AXIAL LENGTH			17. SPRING MUST BE STRESS RELIEVED
		9. TEMPERATURE RANGE _____ TO _____ C			AT ____ C FOR ONE HOUR
		10. MINIMUM SERVICE LIFE _____ CYCLES BETWEEN POSITIONS **A** AND **B**			18.
					19.
		DELPHI ENERGY & ENGINE MANAGEMENT SYSTEMS MUST BE NOTIFIED BEFORE SHIPMENT IF MANDATORY VALUES ARE NOT FOLLOWED.			SAMPLE MUST BE APPROVED BY PRODUCT ENGINEERING BEFORE PROCEEDING WITH PRODUCTION

When printed, this document is uncontrolled.

SPRING - TORSION

The available space on the format is for a detailed drawing which must be supplied as there are no standard ends. Tolerances should be applied to all dimensions that must be held (mandatory). Calculated dimensions (Ref.: (1) GM Design Standard B-1 (2) Computer program) are theoretical and should not be toleranced (advisory). Regardless of the type of load point retainer (loop, straight, bend, etc.), load application point “L” should be dimensioned as shown in Figure 1. Figure 1 also illustrates initial moment position “A”, final moment position “B1”, or “B2”, and free position angle “C”.

A preference mark (“X”) should be placed in the MANDATORY or ADVISORY column. A slash (-) through both columns will indicate no preference. The numbers below correspond to numbered SPECIFICATION items on the drawing format. ITEMS 1-3: All three must be specified either MANDATORY or ADVISORY. Two of them must be MANDATORY (items 1 & 2 preferred). See Figure 2 for reference tolerance.

1. Specified moment, with calculated tolerance, at angular deflection “A”.

2. Specified moment, with calculated tolerance, at angular deflection “B”.

3. Change in moment per degree deflection.

4. ADVISORY: Position with no load applied, no tolerance specified.

5. MANDATORY: See Figure 3.

6. MANDATORY: Minimum dimension allowable per design. Spring calculations must verify that the spring design does not exceed this dimension.

7. MANDATORY: Maximum dimension allowable per design. Spring calculations must verify that the spring design does not exceed this dimension.

8. MANDATORY: Maximum permissible axial length per design. Spring calculations must verify that the spring design does not exceed this dimension.

9. MANDATORY: Ambient temperature range extremes per application.

10. MANDATORY: Spring cycle life is to be specified according to application.

11. ADVISORY: Calculated value.

12. ADVISORY: Calculated value at free position.

13. ADVISORY: Number of coils free to deflect under a load.

14. ADVISORY: Calculated stress at maximum moment deflection.

When printed, this document is uncontrolled.

SPRING - TORSION

15. ADVISORY: Maximum allowable stress is 75% of the minimum tensile strength for the wire diameter and material used. See Figure 4.

16. MANDATORY: If specified.

17. MANDATORY: If specified.

SPRING - TORSION

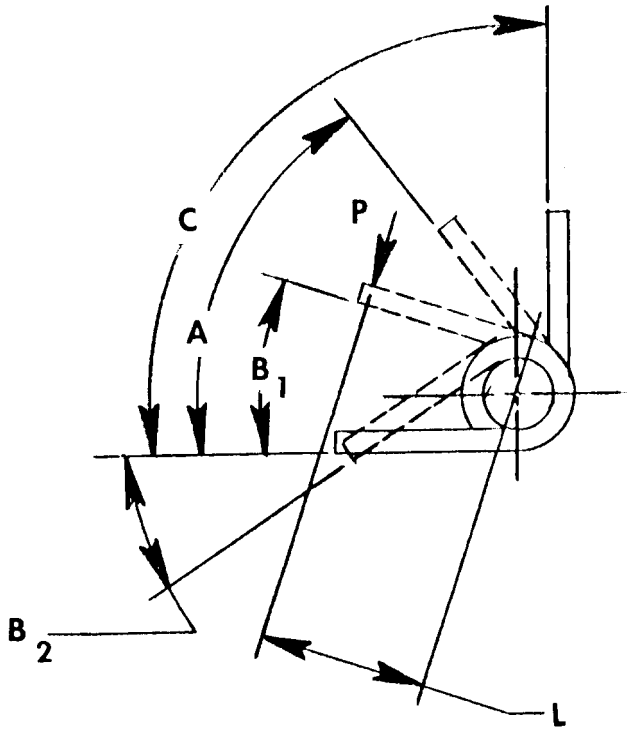

FIGURE 1

TORSION SPRING LOAD SPECIFICATION
TOTAL ANGULAR TOLERANCE (DEGREES)

Number of Coils (N)	Spring Index, D/d								
	4	6	8	10	12	14	16	18	20
1	2	3	3.5	4	4.5	5	5.5	5.5	6
2	4	5	6	7	8	8.5	9	9.5	10
3	5.5	7	8	9.5	10.5	11	12	13	14
4	7	9	10	12	14	15	16	16.5	17
5	8	10	12	14	16	18	20	20.5	21
6	9.5	12	14.5	16	19	20.5	21	22.5	24
8	12	15	18	20.5	23	25	27	28	29
10	14	19	21	24	27	29	31.5	32.5	34
15	20	25	28	31	34	36	38	40	42
20	25	30	34	37	41	44	47	49	51
25	29	35	40	44	48	52	56	60	63

FIGURE 2

SPRING - TORSION

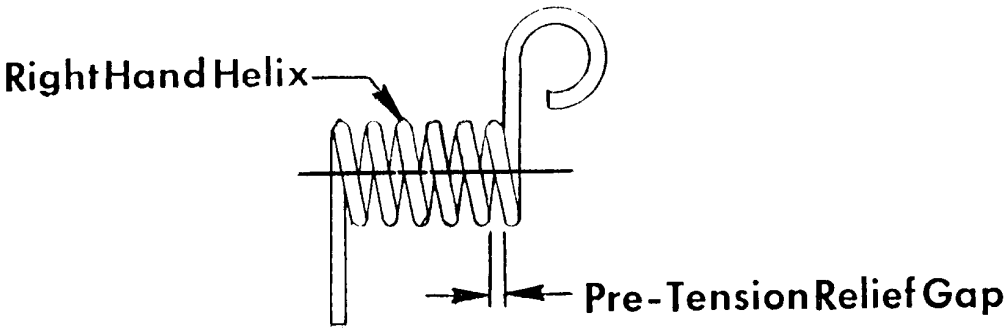

FIGURE 3

MINIMUM TENSILE STRENGTH OF WIRE SPRING MATERIALS
(IN THOUSANDS OF POUNDS PER SQ. IN.)

WIRE SIZE IN.	MUSIC WIRE	TYPE 302	WIRE SIZE IN.	MUSIC WIRE	TYPE 302
.008	399	325	.036	321	273
.009	393	325	.037	321	272
.010	387	320	.038	318	271
.011	382	318	.039	318	270
.012	377	316	.040	315	270
.013	373	314	.041	315	269
.014	369	312	.042	313	268
.015	365	310	.043	313	267
.016	362	308	.044	313	266
.017	362	306	.045	309	264
.018	356	304	.046	309	263
.019	356	302	.047	309	262
.020	350	300	.048	306	262
.021	350	298	.049	306	261
.022	345	296	.050	306	261
.023	345	294	.051	303	261
.024	341	292	.052	303	260
.025	341	290	.054	303	260
.026	337	289	.055	300	260
.027	337	287	.056	300	259
.028	333	286	.057	300	258
.029	333	284	.058	300	258
.030	330	282	.059	296	257
.031	330	280	.060	296	256
.032	327	277	.061	296	255
.033	327	276	.062	296	255
.034	324	275	.063	293	254
.035	324	274	.065	293	254

FIGURE 4

THREADS - INCH

A. Cored hole sizes.

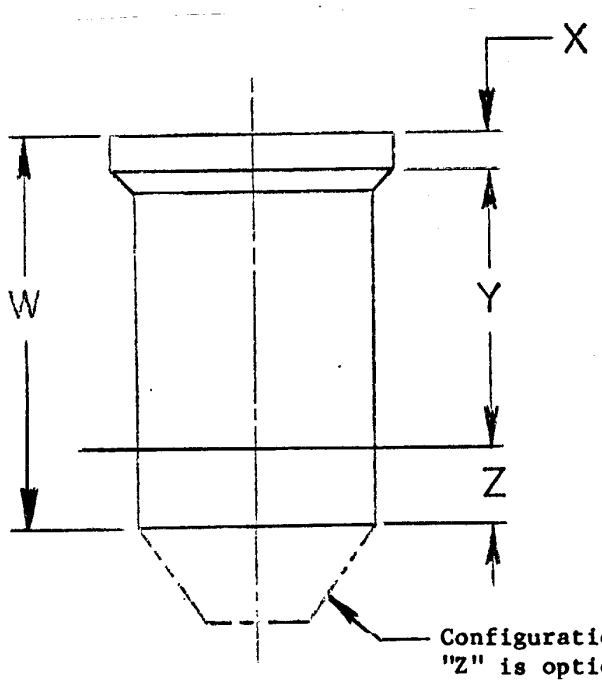

W = dimension to be put on drawing

X = counterbore depth (see 7019999)

Y = minimum full thread (for attaching screws, this must be B times the nominal thread size plus tolerance stack-up)
B = see p. A-9.2.8

Z = minimum allowance for thread runout and chip clearance (for blind holes only)
= .08 min for #6 - #8
= .12 min for #10 - 9/16
= .16 min for 5/8 - 1

Configuration and size of cored hole beyond dimension "Z" is optional and may vary with design requirements.

Guideline for calculating cored hole size for cored holes that will be machined:

MAXIMUM CORED HOLE DIAMETER =

MINIMUM MINOR DIAMETER - [LOCATIONAL TOLERANCE OF FINISH HOLE INCLUDING RELATED DATUM BONUSES + LOCATIONAL TOLERANCE OF CAST HOLE INCLUDING FEATURE AND RELATED DATUM BONUSES+.006]

When printed, this document is uncontrolled.

THREADS - INCH

B. PIPE THREADS

DRYSEAL AMERICAN STANDARD FUEL INTERNAL STRAIGHT PIPE THD. (NPSF)

A		B	C	D		E		F & G	
NOMINAL SIZE & PIPE THREADS PER INCH	CAST DIA DRAFT INCLUDED (REF.)	FINISH DIA DRILLED OR CAST	CHAM DIA 90° INCL ANGLE	MINIMUM FULL THREAD		MIN DEPTH OF HOLE FOR MAX FULL THREAD		NO. TURNS PLUG GAGE ENTERS	
				NO.	IN. DEPTH	CORED	FINISH	F	G
1/16-27	.235	.249-.253	.34	8.44	.31	.50	.47	2.25	3.75
1/8-27	.330	.3427-.3467	.43	8.44	.31	.50	.47	2.25	3.75
1/4-18	.430	.443-.447	.56	8.44	.47	.75	.72	2.00	3.50
3/8-18	.563	.5771-.5811	.70	9.00	.50	.75	.72	2.25	3.75
1/2-14	.703	.7177-.7217	.86	9.19	.66	.97	.94	2.50	4.00

DRYSEAL AMERICAN STANDARD INTERMEDIATE INTERNAL STRAIGHT PIPE THD. (NPSI)

1/16-27	.235	.249-.253	.34	8.44	.31	.50	.47	3.25	4.75
1/8-27	.330	.3427-.3467	.43	8.44	.31	.50	.47	3.25	4.75
1/4-18	.430	.443-.447	.56	8.44	.47	.75	.72	3.00	4.50
3/8-18	.563	.577-.581	.70	9.00	.50	.75	.72	3.25	4.75
1/2-14	.703	.7177-.7217	.86	9.19	.66	.97	.94	3.50	5.00

Typical notes to be used:

B DIA TO E MIN DEPTH

90° INCLUDED ANGLE COUNTERSINK C DIA

A (NPSF OR NPSI) DRYSEAL THREAD D MINIMUM FULL THREADS

GAGE WITH A ANY (L_1) DRYSEAL PLUG

GAGE TO ENTER F TO G TURNS

When printed, this document is uncontrolled.

THREADS - METRIC

A. Thread Designations

Basic Thread Designation

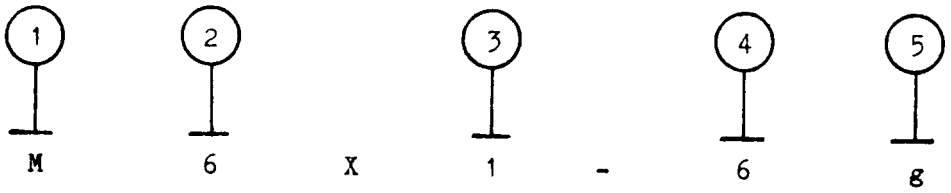

Complete Thread Designation

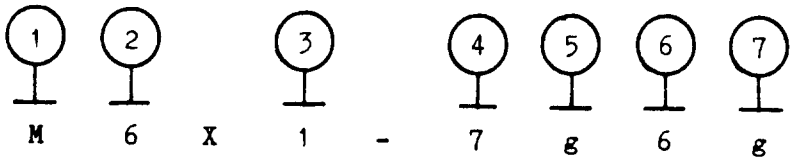

One of the above is all that is required on a drawing to specify a thread. Do not add "Pitch Dia.", etc. unless it is a "bastard" thread.

1. ISO Metric thread designation

   ISO Metric is not one word. I.S.O. stands for International Organization for Standardization.

2. Nominal thread size (basic major diameter) in mm.

3. Pitch in mm. For standard pitches, refer to ASME B1.13M-1995 (or the latest). Unless a fine thread (adjusting, etc.) is required, one of the standard commerical general purpose pitches should be used. The larger number is the coarser thread.

   To obtain approximate metric pitch equivalent of English "Threads Per Inch", ie, 1/4 - 20 UNC-2A:

   $\frac{1.0}{20}$ x 25.4 - 1.27 mm or 1.25 Standard
   (Threads per Inch)

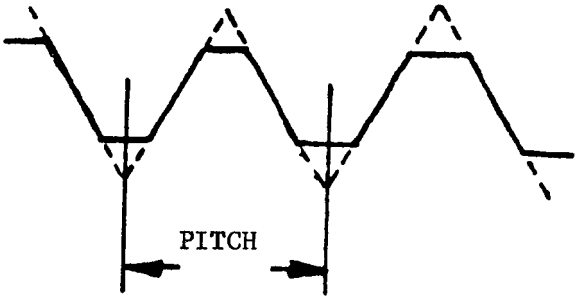

THREADS - METRIC

4. Tolerance Grade of the pitch diameter.

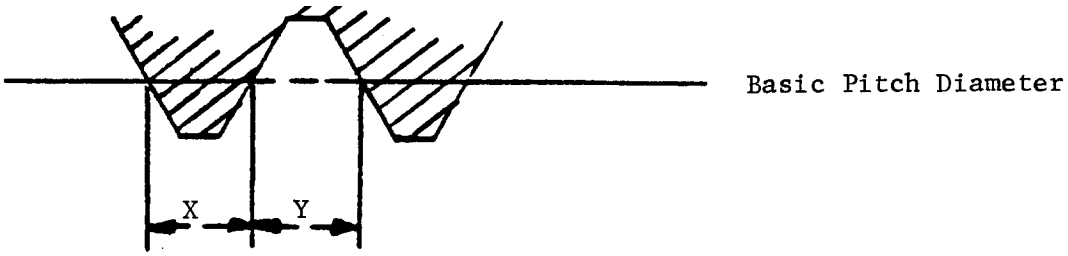

The basic pitch diameter is that point along the axial plane where “X” & “Y” are equal for internal & external threads. The tolerance grade for the pitch diameter determines the class of threads by varying the allowable tolerances. The general range will be from 4 through 8 and our standard will be 6 grade. Also see ASME B1.13M-1995 (or the latest). The lower the number, the finer the quality of thread.

5. Tolerance position

This defines the maximum material limits of the pitch & crest diameters of the external & internal threads. This letter also indicates the “allowance” and whether it is an external or internal thread.

Allowance: The undercut of a thread to allow space for plating or coating. It has no tolerance of its own, but establishes the upper limit of the plating undercut of an external thread & the lower limits of an internal thread. If excessive plating thickness is required, see basic formula section. Caution: Allowances made for plating thickness reduce the maximum material condition of the base material & diminish thread strength - do not overplate.

External Thread	Internal Thread
(Lower Case Letters)	(Upper Case Letters)
e - Large Allowance	G - Small allowance
g - Small Allowance	H - No allowance
h - No Allowance	

Allowances do have numerical values. Also see ASME B1.13M-1995 (or the latest).

Use lower case “g” for external threads and upper case “H” for internal threads for general usage. For external unplated threads, use lower case “h” (no allowance) for better fit when practical, such as with plastic, aluminum, brass, stainless steel, etc.

THREADS - METRIC

It is generally assumed that internal threads will have no plating and the letter "H" will be used. If plating process indicates that plating will occur in the internal threaded area, then an "allowance" consistant with expected plating thickness must be provided.

Plating or coating - The maximum plating thickness (perpendicular to the thread) cannot exceed 25% of the allowance per chart. If more plating is required, see basic formula section.

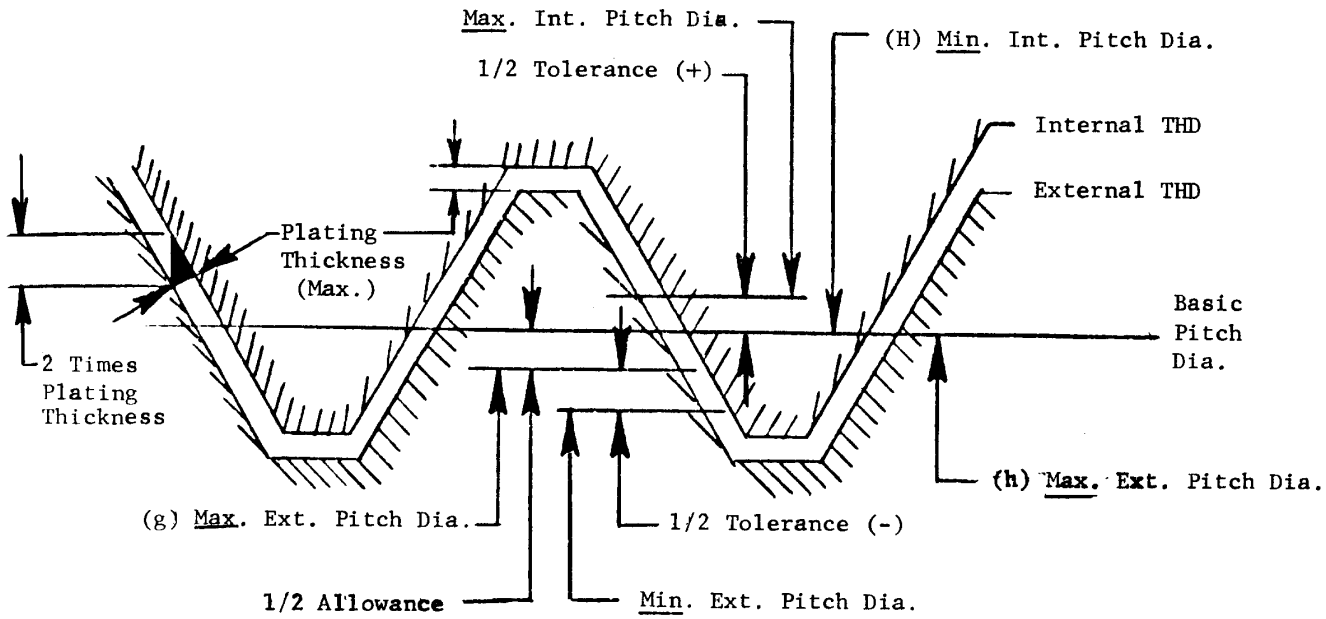

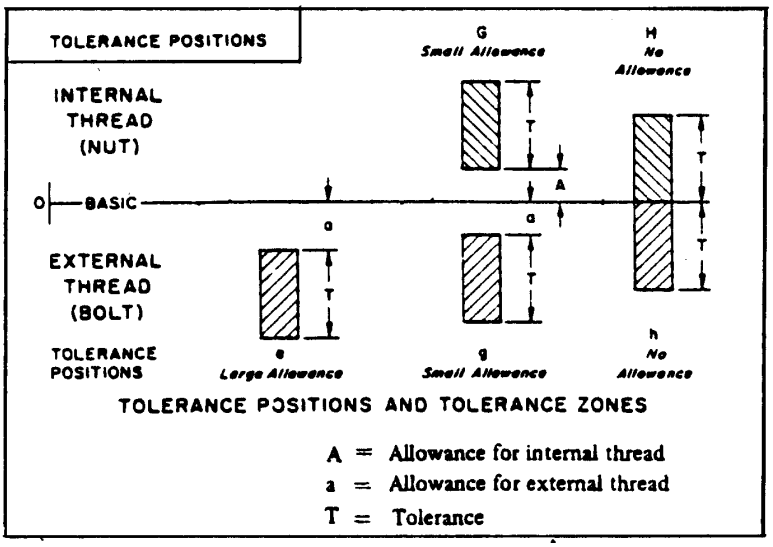

THREADS - METRIC

6. Crest diameter tolerance grade. (Use this only if different from pitch tolerance grade.)

7. Crest diameter tolerance position. (Use this only if different from pitch tolerance position.)

   If “6” and “7” above are omitted from the thread designation, it is assumed that the crest and pitch diameters have the same tolerance grade and position. In many cases we will want to change the pitch diameter tolerance for a better fit (especially adjusting screws). Then we would use “5g6g” which denotes a “tighter” tolerance on the pitch diameter and a “normal” tolerance on the crest diameter.

B. Basic Thread Formulas

Do not attempt to “soft” convert English threads to metric.

D = Nominal thread size (basic major dia.)

a = Allowance for external thread

A = Allowance for internal thread

P = Pitch

Pd_t = Pitch dia. tolerance for internal thread

pd_t = Pitch dia. tolerance for external thread

d = Major dia. tolerance for external thread

MD = Minor dia. tolerance for internal thread

d_2 = Basic pitch dia. = D - (0.64952 X P)

TP = Thread profile = 1.0825 X P

THREADS - METRIC

1. External Threads

Unplated (h)

Max. major dia. = D

Min. major dia. = D-d

Max. pitch dia. = d_2

Min. pitch dia. = $d_2 - pd_t$

Max. minor dia. = D - TP

Before Plating (g) x = max. plating thickness

	If 2x > a & 4x < a + pd_t	If 2x < a < 4x	If 4x < a
Max. major dia.	D - 2x	D - a	D - a
Min. major dia.	D - a - d	D - a - d	D - a -d
Max. pitch dia.	d_2 - 4x	d_2 - 4x	d_2 - a
Max. pitch dia.	$d_2 - a - pd_t$	$d_2 - a - pd_t$	$d_2 - a - pd_t$
Max. minor dia.	D - TP - 2x	D - TP- a	D - TP- a

NOTE: If 4x > a + pd_t, then a special thread design is required.

THREADS - METRIC

2. Internal Threads

Unplated (H)

Min. major dia. = D

Min. pitch dia. = d_2

Max. pitch dia. = $d_2 + PD_t$

Min. minor dia. = D - TP

Max. minor dia. = D - TP + MD

Before Plating (G) x = max. plating thickness

	If 2x > A & 4x < A + PD_t	If 2x < A < 4x	If 4x < A
Min. major dia.	D + 2x	D + A	D + A
Max. major dia.	Pd_t + D + 0.14434P	Pd_t + D + 0.14434P	Pd_t + D + 0.14434P
Min. pitch dia.	d_2 + 4x	d_2 + 4x	d_2 + a
Max. pitch dia.	$d_2 + A + PD_t$	$d_2 + A + PD_t$	$d_2 + A + PD_t$
Min. minor dia.	D - TP + 2x	D - TP + A	D - TP + A
Max. minor dia.	D - TP + MD + 2x	D - TP + MD + A	D - TP + A + MD

NOTE: If 4x > A + PD_t, then a special thread design is required.

THREADS - METRIC

C. Allowance and Tolerance Formulas

For pitches and/or nominal sizes, refer first to ANSI B1.13M-1995 (or the latest) Metric Screw Threads-M Profile, and then to ISO Standards.

D. Pipe Threads - At the present time, there are no metric pipe threads available. (Any pipe threads should be specified in inches.)

E. Thread Plating and Allowance

1. Use of the AFTER PLATING note is not recommended because it would necessitate reducing manufacturing tolerance or possibly even undercutting diameters. Without the note, the allowance is used for plating. If the plating thickness exceeds what is available from the allowance, manufacturing tolerance is reduced (the upper limit is lowered).

2. No recommendations are made about how to split the allowance between plating and assembly clearance. This will be determined by design requirements.

3. The screw thread section of GM Design Standards does not represent an exception to the general understanding that a drawing should show a completely processed part. The Standards state that unless otherwise specified the allowance may be used for plating. This must be included in the interpretation of a drawing.

4. Unless functional requirements dictate otherwise, use the coarsest pitch within the required length of thread engagement range.

When printed, this document is uncontrolled.

THREADS - METRIC

F. Cored hole sizes.

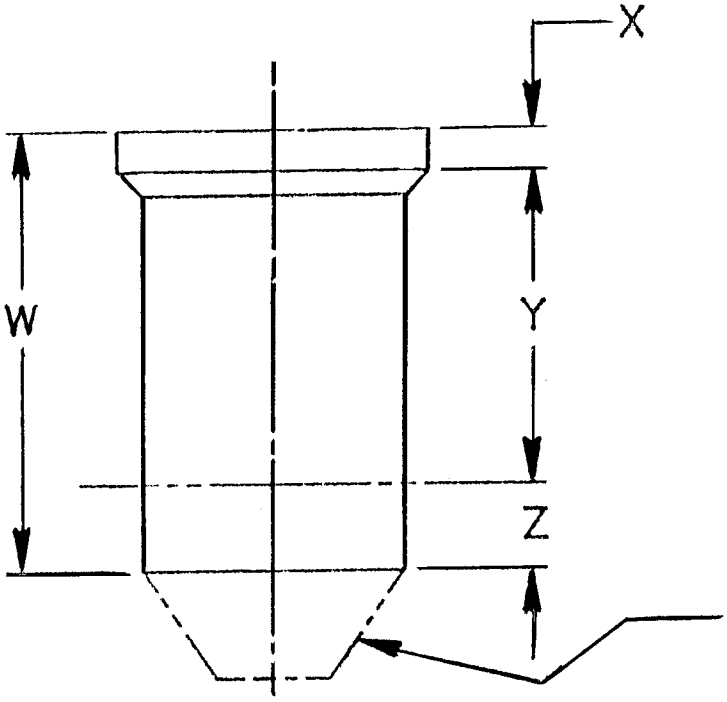

W = dimension to be put on drawing

X = counterbore depth (see 7019999)

Y = minimum full thread (for attaching screws, this must be B times, the nominal thread size plus tolerance stack-up) B = see p. A-9.2.8

Z = minimum allowance for thread runout and chip clearance (for blind holes only)
= 2.0 min for M 3 - M 4
= 3.0 min for M 4.5 - M 14
= 4.0 min for M 16 - M 39

Configuration and size of cored hole beyond dimension “Z” is optional and may vary with design requirements.

Guideline for calculating cored hole size for cored holes that will be machined:

MAXIMUM CORED HOLE DIAMETER =

MINIMUM MINOR DIAMETER - [LOCATIONAL TOLERANCE OF FINISH HOLE INCLUDING

RELATED DATUM BONUSES + LOCATIONAL TOLERANCE OF CAST HOLE INCLUDING

FEATURE AND RELATED DATUM BONUSES + 0.15]

THREADS - METRIC

G. Machined hole sizes

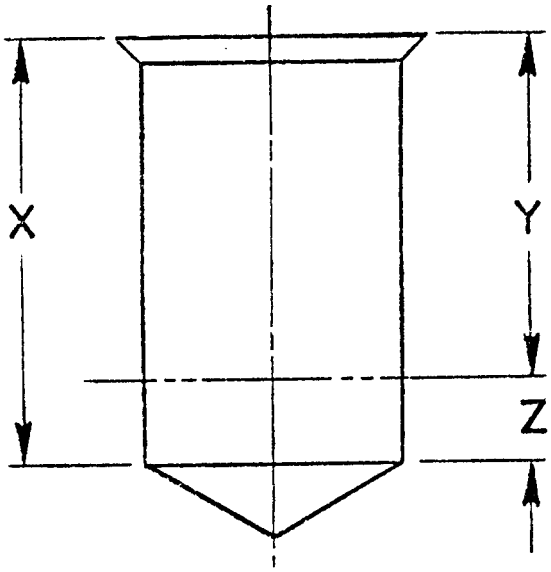

X = dimension to be put on drawing

Y = minimum full thread (for attaching screws this must be “B” times the nominal thread size plus tolerance stack-up)
B = 1.0 for steel
= 1.5 for brass, zinc
= 2.0 for aluminum

Z = minimum allowance for thread runout and chip clearance (for blind holes only)
= 2.0 min for M 1 - M 4
= 3.0 min for M 4.5 - M 14
= 4.0 min for M 16 - M 39

Machined hole diameters prior to threading are not to be specified on a drawing.

Typical Drawing Callout:

TAP DRILL X 19.0 DEEP
M6 X 1 - 6H X 17.0 DEEP

TAP DRILL X 19.0 DEEP
M6 X 1 - 6H X 17.0 MINIMUM FULL THREAD

GENERAL RULES

These general rules are listed to alert drafting personnel to critical design circumstances. Design engineering and design drafting should concur on exceptions.

1. Wherever possible movable parts (links, levers, etc.) should be designed with 2.3 mm (.09") min. clearance between these parts and any adjacent surfaces and/or features.

2. When a design requires a "rivet type" spinning operation (eg. throttle shaft and lever assemblies), clearance must be allowed for orbital spinning heads now being used. This clearance should be allowed whenever possible, however, if space is a problem, compromises should be negotiated with Tool Engineering.

3. For all new and rework designs, the minimum fillet radius is 0.60 mm (.025"). This applies to all materials and processes.

4. For port punching, wall thickness should be controlled to 1.42 - 1.60 mm (.056" - .063") rather than controlling the down-hole location.

GLOSSARY

CN – Change Notice: GES documentation of initial and final Change Implementation Board reviews, and authorization for engineering drawing changes and releases**.**

CR – Change Request: GES documentation of a request for an engineering change, the business case, and disposition.

DESIGN CHECK LIST - Validation documentation originated by the design engineer and supplied with the change package.

GM TOPS - General Motors Total On-line Project System: A mainframe system for all types of financial work orders. It is a project based tool for budget development, cost tracking, and program decision making.

PEM - Product Engineering Memo: Document used to originate various design projects

SYMBOLS

Hole number
Feature number

UG ID symbol acceptable,
size 16

> **XXX** <

Material identification per ISO 11469

STANDARD NOTES

The following list contains standard notes which should be used for the applications shown.

1. On all shaft and lever assembly drawings:

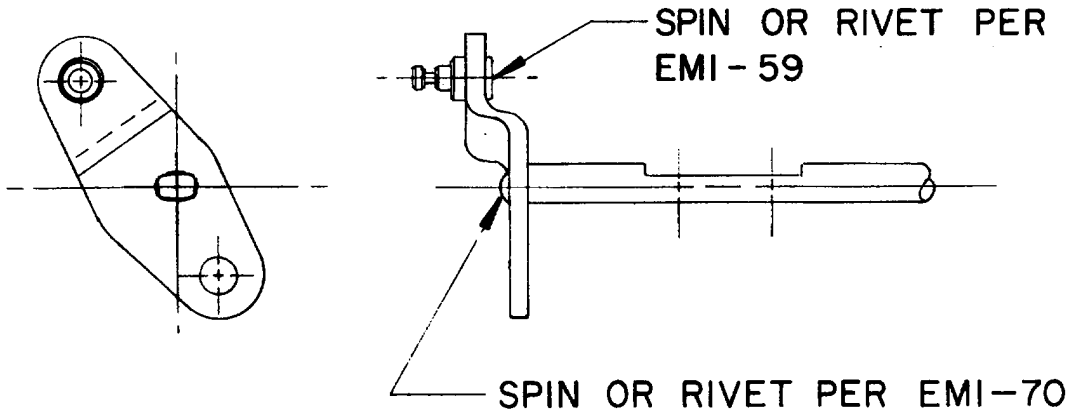

2. On all drawings of levers with adjustable tangs and all links with adjustable ends:

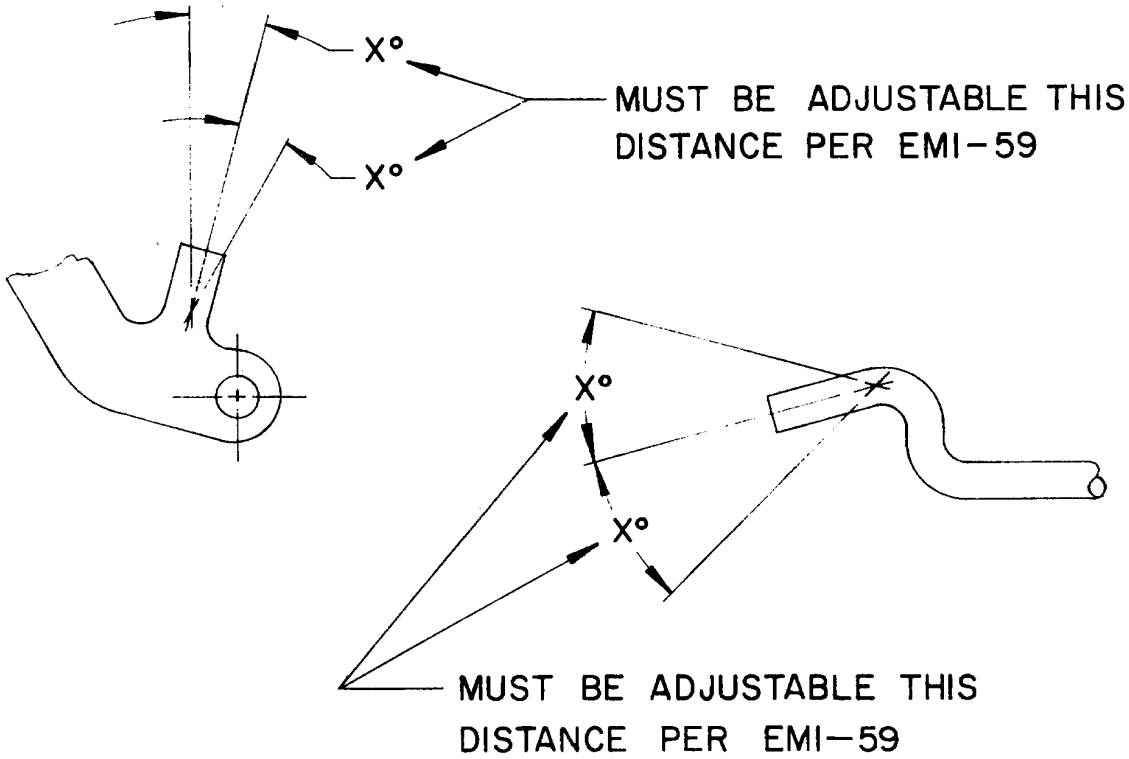

STANDARD NOTES

3. On drawings where a section is cut or a view taken and the section or view is shown on another sheet, the following note should be added (only where the section or view is drawn).

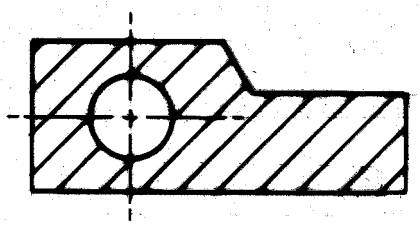

SECTION A-A
LOCATED ON SHEET X

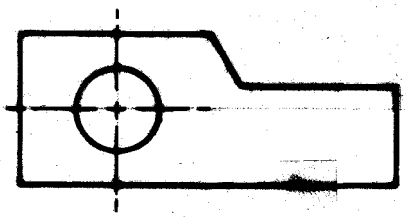

VIEW A
LOCATED ON SHEET X

STANDARD NOTES

4. On any link drawing, where a diamond groove is being shown, the following note should appear:

   RADIAL ORIENTATION OF DIAMOND GROOVE MAY BE VARIED TO FACILITATE MANUFACTURING.

5. The following note should be used when identifying callouts on assembly drawings for items that are for assembly and test information only, but do not have part numbers on the product structure.

   2 THESE ITEMS ARE FOR ASSEMBLY AND TEST INFORMATION ONLY AND DO NOT HAVE PART NUMBERS.

6. When the hole number symbol is used on a drawing, the following general note is added (sheet one only of multi-sheet drawings):

   XXX DENOTES HOLE NUMBER.
   MANUFACTURING DATA ONLY.

7. For typical purposes:

   IDENTIFICATION PER XXXXXXXX
   STYLE X, X.X High Raised X.X
   (or X.X DIA.) (or X.X DEEP)

   There may not be reference to a style number.

IDENTIFICATION

A. GENERAL: Stamped and cast parts, finished machined parts, and assemblies (all new product design) must include provision for placement of required identification described in EMI-40. The identification on external parts should be visible when the unit is completely assembled. This must be considered early in the design stage to insure that the part can be manufactured without added cost. The identification should be indicated on the drawing as shown below.

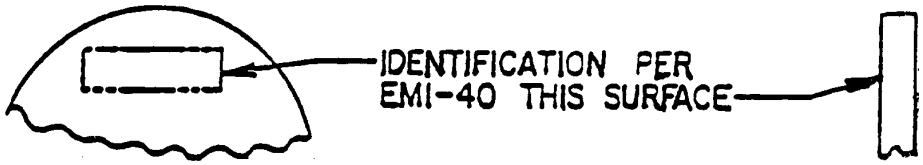

IDENTIFICATION

D. Plastic parts will be marked per the ISO 11469 (with ISO 1043-1 and 1043-2) Standard to designate the general type of material from which the part was fabricated. Also see the Symbols section of this Section.

1. Symbols will be added to all new drawings and corresponding molds for plastic parts. Symbols will be added only to parts large enough to accept a reasonably legible symbol.

2. Symbols will be added to existing drawings at the discretion of the design responsible engineer.

3. Materials Engineering should be consulted to determine the correct symbols for a given part.

FORMAT
NX

Drawing formats for Unigraphics will be as produced by the corporate drawing format program, and as described in the Delphi Engineering Standards Section C, with the following additional specifications:

A. Title Block

1. For multiple sheet drawings, the total number of sheets will be deleted from all but sheet one.
2. The drawing size will <u>not</u> be edited.
3. The date for drafter (DR) is the drawing date.
4. Approval boxes will be used as follows:

APVD1	Design Engr.
APVD2	Mat'l. Engr.

5. When a sheet is later added to a drawing, the original title block information is carried over to the new sheet
6. For multiple sheet drawings, MATERIAL SPEC and REFERENCE are filled in on sheet one only, as needed.

B. Revision Block

1. The Drawing Status Stage (STG) will be recorded as a U (unreleased) for each revision on experimental or pre-production drawings. It is recorded as an R (released) for each revision after production release.
2. If there is a single change event for a revision, a dash (-) is entered in the CHG column. When there are multiple change events, each one is identified in the CHG column with an alphabetical symbol, beginning with A for each revision.
3. The N/P column is left blank (also see item 5 below).
4. A dash (-) is entered in the APVD1 column (also see item 5 below).
5. The columns for DATE, STG, REV and N/P are completed for only the first change event of a revision, and AUTH, DR, APVD1, and APVD2 are completed for only the last change event of a revision.
6. On chart grid sheets, the affected grid line number is included at the beginning of a revision history recording.
7. For the ENGRG REL recording for production release, the releasing CN and date are placed in the AUTH and DATE columns respectively, an R is placed in the STG column, and the REV column is left blank (no dash). Approver initials are added in the APVD2 column.

FORMAT
NX

C. Standard specialized blocks of information are added to a drawing with the Delphi-E & C TCR *Format Block* program. These blocks include grids for chart drawings and spring design formats.

D. All input text for the title block, revision block, and other blocks produced by the corporate drawing format program will be entered and deleted only through the same program.

E. The Designated Characteristics block (KPC and QCI), when required, will be placed on the first sheet of multiple sheet drawings. If there is inadequate space on the first sheet of an existing drawing, a general note must be added to the first sheet stating on what other sheet the block is located.

F. Guidelines for when to apply the Delphi corporate drawing format:

1. Required for new drawings, including new-numbered drawings at the time of design level advance and production release.

2. Required for new drawing sheets added to existing drawings.

3. Required when an NX file is brought into DCS compliance without formal authorization. This should be recorded as NO CHG EXCEPT DWG FORMAT UPDATE.

4. When revising a drawing that has a former type of format, the format should be upgraded.

<u>NOTE:</u> When a drawing is upgraded to the new format, it is understood that the following may change as a result:

a: location of some views.
b. the appearance of some views.
c. the drawing scale.
d. the number of sheets.
e. sheet size.

Such adjustments are permissible and are within the definition of redrawn with no change because the <u>design</u> is not changed, there is no physical change to the part.

FORMAT
NX

G. Revision History Retention

1. When converting a drawing to the corporate drawing format from the former Delphi common drawing format (produced by the GM program named *fmt_user_tool*), the entire revision history is retained by the format conversion program.

2. When converting a drawing to the Delphi common drawing format from earlier formats (no drawing format program), the following rules apply to retention of the revision history:

   a. Up to and including five (5) lines of recorded information: carryover to new format (retain).

   b. Six (6) or more lines of recorded information: consult the design responsible engineer for requirements. At least one complete authorized revision (CN, PEM) must be retained.

   c. In any case, when the revision history for an authorized revision (CN, PEM) is retained, it must be retained in its entirety (all lines of recorded information).

DRAWING NAMES

A. When the method of fabrication is sufficiently important that separate drawings are made for each process, the process is entered at the end of the drawing name and preceded by a dash (-).

Examples: THROTTLE BODY-CASTING

THROTTLE BODY-FINISH

FUEL RAIL-EXTRUSION

B. When an early stage of manufacture is sufficiently important that separate drawings are made, the name for the type of piece is used as the first word in the drawing name.

Examples: BLANK-DIRECTOR

SLUG-BODY

C. The drawing name should be the same as used throughout GES.

BILINGUAL DRAWINGS
and Dual Language Drawings

A. Definitions

1. BILINGUAL DRAWING - A drawing with complete, separate sheets translated to a second language in addition to the primary English language drawing.

2. DUAL LANGUAGE DRAWING - A drawing with notes and callouts in a second language added to an English language drawing.

B. Sheet numbering

1. For a bilingual drawing, the sheets in the second language follow the sheets in English, with all sheets numbered consecutively. For example, a 3 sheet drawing would become a 6 sheet bilingual drawing with sheets numbered 1 through 6. Sheet one would be SHEET NO. 1 OF 6.

2. The sheets of a dual language drawing are numbered the samea as an English-only drawing.

C. For a bilingual drawing, the first sheet in the second language requires a title block as complete as on sheet one. This is an exception to the standard practice for multisheet drawings.

D. Standard notes for bilingual drawings

1. On sheet one:

   THE (name of second language) TRANSLATION
   FOR THIS DRAWING BEGINS ON SHEET X.

2. On sheet one and translated on the first sheet in the second language:

   THE ENGLISH TEXT ALONE IS VALID.
   THE TRANSLATIONS ARE PROVIDED TO ASSIST
   THE READER IN UNDERSTANDING THE DRAWING.

E. The above principles shall also apply to a drawing produced in more than two languages.

When printed, this document is uncontrolled.

PRODUCTION RELEASE

A released drawing must be a CAD-derived image, CAD plot, pencil original, or a photographic reproduction.

A. Release of a Quote, Development, or Prototype Stage drawing

1. All drawings being released must have the following items completed by the drafter.

CN number (in Revision block)
Drawing title
Part Number
The drafter's signature
* The drawing date
Approvers' signatures (see E120NY)

* When the approval signature stamp is used per E120NY, the drawing date is taken from the Product Engineer's signature in the stamped area.

2. The following items must be completed by the drafter where applicable.

EMI (in Applied Specs.)
Scale
Reference
Material Spec

B. Production Release Recording

1. All drawings being production released will have the words ENGRG REL noted in the revision history column. (Immediately prior to the time of release.) For drawings that will be tracked in Anderson-based engineering systems, also see the section on Recording Drawing Revisions, which begins on page B-3.2.

2. In cases where a drawing is released to production with no drawing history – not from an RP or design level drawing – the recording on all sheets will be as shown immediately below.

DWG STATUS					ZONE	REVISION HISTORY	AUTH	DR	APVD 1	APVD 2
DATE	STG	REV	N/P	CHG						
11NOO2	R	OO1		-	-	ENGRG REL	XXXXX XXXXX	-	-	GHJ

PRODUCTION RELEASE

C. Releasing experimental drawings to production.

1. SPN Drawings (Design Level)

   See other section of this Standard beginning on page B-3.6.

2. RP Number Drawings

   a. The following recording is added to the RP drawing (rev. 004):

DWG STATUS					ZONE	REVISION HISTORY	AUTH	DR	APVD 1	APVD 2
DATE	STG	REV	N/P	CHG						
10JA02	U	001		-	-	DRAWING CREATED	XXXXX XXX	-	-	-
04FE02	U	002		-	G7	1.3B WAS 1.25	XXXXX XXX	ABC	-	BCD
09MY02	U	003		-	D10	SECTION H-H ADDED	XXXXX XXX	CDE	-	DEF
11N002	U	004		-	-	RELEASED AS 17120134 THRU REV 002 ON XXXXXXXXXX	-	FGH	-	GHJ

CN CREATION DATE

   b. A CAD copy of the experimental drawing is prepared for release by removing names, dates, first used, revision record, and the drawing number from the title block.

   c. A print of the RP drawing is included in the CN package. It is not to be obsoleted at this time.

   d. The following recording is made on the production drawing:

DWG STATUS					ZONE	REVISION HISTORY	AUTH	DR	APVD 1	APVD 2
DATE	STG	REV	N/P	CHG						
11N002	R	001		-	-	ENGRG REL	XXXXX XXXXX	-	-	GHJ

PRODUCTION RELEASE

D. Releasing GM/NAO or other Delphi Automotive Systems division drawings:

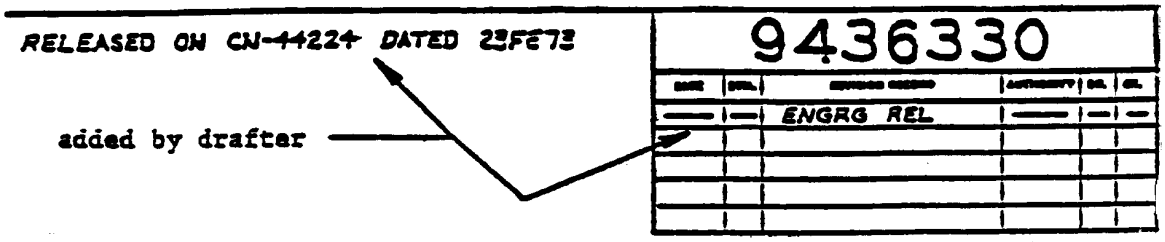

The word **ORIGINAL** should be stamped in the lower right border of any GM/NAO or other Delphi Automotive Systems division drawings released to production at Delphi-E&C.

E. Engineering Manufacturing Instructions

DELPHI AUTOMOTIVE **ENERGY & CHASSIS SYSTEMS** **Technical Center ROCHESTER, NY 14602-0366 USA** ENGINEERING MANUFACTURING INSTRUCTIONS	**EMI -** **SHEET NO. 1** **OF SHEETS** **REV. LEVEL**
DWG. DATE	DR.
MAT'L ENGRG.:	PRODUCT ENGRG.:
RELEASED BY EWO: AA111 01JA00	**EMI -**

NOTE: The total number of sheets should appear on sheet one only.

PRODUCTION RELEASE

F. Service Drawings

1. When drawings with part numbers other than Delphi-E & C are released for service only, **SERVICE** should be added in the lower right hand border of the drawing (example below).

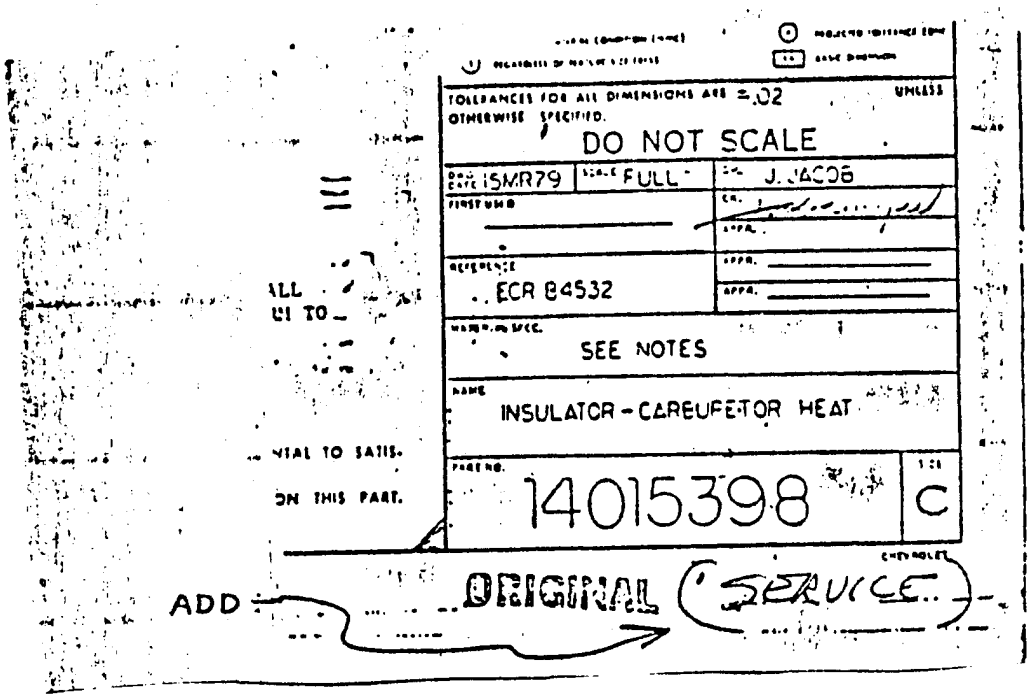

G. Drawings from outside the corporation.

1. Assign regular Delphi part numbers and chart numbers to all “customer” drawings. Vendor part and drawing information should be added in PDS.

2. Initiate an EWO to release the part numbers, part list and drawings. On the “customer” reproducible drawings, hand letter the Delphi part number below the “customer” number and also hand letter “Released on XXXXX Dated DA MO YR and ENGRG REL in the revision column. The word “original” should be stamped in the lower right hand border. See page B-2.1.2 of this Standard. Then microfilm and file originals in the normal file drawers by size and Delphi number. It must be noted that those drawings used as a chart will also have the Delphi number hand lettered next to the “customer” number or dashnumber.

3. For any future revisions, use the established EWO procedure. This includes recording drawing revisions per item k on pages B-3.2.1 and 3.2.4 of this Standard.

PRODUCTION RELEASE

H. Prototype Released or Development Released Drawing

The following examples would also apply to a Development Released drawing. No design level Quote Stage drawing is affected.

a. With revisions at the time of production release.

DWG STATUS					ZONE	REVISION HISTORY	AUTH	DR	APVD 1	APVD 2
DATE	STG	REV	N/P	CHG						
10JA02	U	001		-	-	DRAWING CREATED	XXXXX XXX	-	-	-
04FE02	U	002		-	G7	1.38 WAS 1.25	XXXXX XXX	ABC	-	BCD
09MY02	U	003		-	D10	SECTION H-H ADDED	XXXXX XXX	CDE	-	DEF
11JN02	U	004		-	-	PART PROMOTED TO PROTOTYPE STAGE THRU REV 003	XXXXX XXXXX	FGH	-	GHJ
11JN02				-	-	PROTOTYPE REL	XXXXX XXXXX	-	-	HJK
19JL02	U	005		A	D8	6.58 WAS 5.90				
				B	B9	9.5 ADDED	XXXXX XXXXX	HJK	-	JKL
12AU02	R	006		-	D7	10 WAS 10.5				
				-	-	ENGRG REL	XXXXX XXXXX	KLM	-	LMN

b. Without revisions at the time of production release.

DWG STATUS					ZONE	REVISION HISTORY	AUTH	DR	APVD 1	APVD 2
DATE	STG	REV	N/P	CHG						
10JA02	U	001		-	-	DRAWING CREATED	XXXXX XXX	-	-	-
04FE02	U	002		-	G7	1.38 WAS 1.25	XXXXX XXX	ABC	-	BCD
09MY02	U	003		-	D10	SECTION H-H ADDED	XXXXX XXX	CDE	-	DEF
11JN02	U	004		-	-	PART PROMOTED TO PROTOTYPE STAGE THRU REV 003	XXXXX XXXXX	FGH	-	GHJ
11JN02				-	-	PROTOTYPE REL	XXXXX XXXXX	-	-	HJK
19JL02	U	005		A	D8	6.58 WAS 5.90				
				B	B9	9.5 ADDED	XXXXX XXXXX	HJK	-	JKL
12AU02	R	006		-	-	ENGRG REL	XXXXX XXXXX	KLM	-	LMN

REPLACING LOST DRAWINGS

When a drawing is lost, the procedure for replacement shall be as follows:

1. Obtain a reproducible print from the latest microfilm card.

2. Record on this print **Duplicate of Lost Tracing** just below the top border line of the drawing, if possible. If this is not possible, it is permissible to record in the upper margin of the drawing.

3. **Duplicate of Lost Tracing** should be printed in letters 6.0 mm to 10.0 mm in height.

4. As soon as practical, the duplicate drawing should be redrawn in accordance with the procedure outlined under Obsoleting Drawings and Recording Drawing Revisions. (The recording **Duplicate of Lost Tracing** should not be repeated on the new drawing.)

5. If the lost drawing is found before it is redrawn, the duplicate should be destroyed and replaced with the original.

6. If the lost drawing is found after it is redrawn, it (the lost drawing) should be destroyed as a new original is now in the system.

LETTERING AND LINE CONVENTION

A. All lettering is written horizontally. (Exception - see Zero Line Dimensioning).

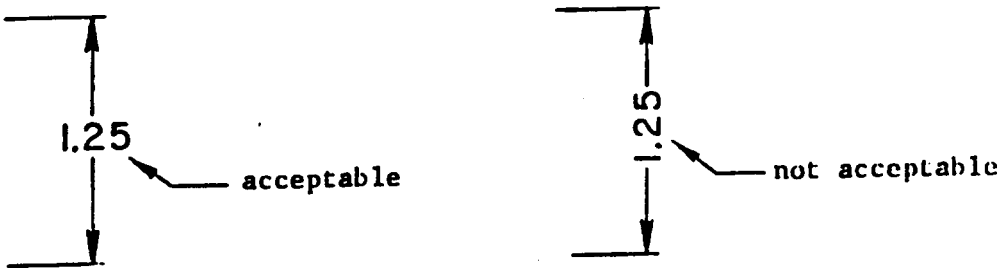

B. All lettering in the field of a drawing (unless otherwise specified) will be 3.5 mm (formerly 4) high and vertical in style.

C. All lettering in the revision column will conform to the sizes specified in the RECORDING DRAWING REVISIONS pages of this section.

D. Part names and numbers will conform to the sizes specified in the FORMAT pages of this section.

E. Variables on chart drawings will be identified with 10 mm (formerly 9.5) high lettering.

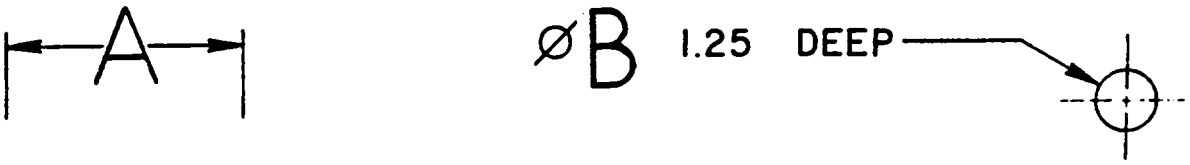

F. Variables on geometric dimensioned chart drawings will be identified with 10 mm (formerly 9.5) high lettering. In addition, where the charted dimension is basic, the word basic will be lettered below the variable in 3.5 mm (formerly 4) high letters. (The letter is not to be enclosed in a box as is normally done with a basic dimension.)

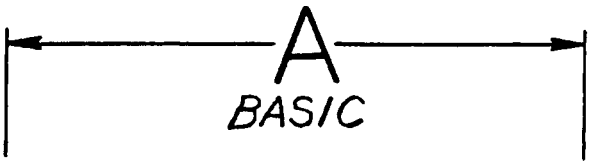

LETTERING AND LINE CONVENTION

G. Section letters should be 6 mm in height and drawn as shown below for manual and UGMX drawings; 7 mm Leroy font (Helios font optional; font must be consistent within a drawing) in Unigraphics. The word section should be lettered in 4 mm high letters.

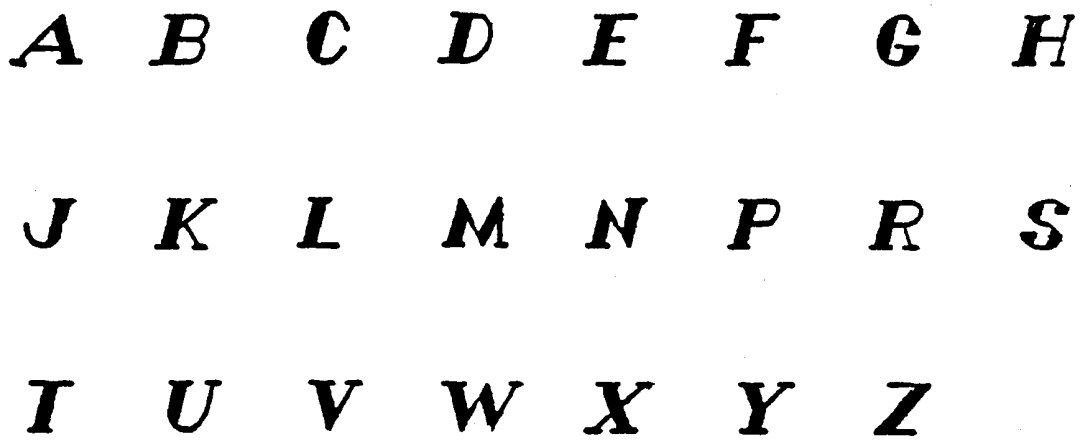

Example: SECTION A - A

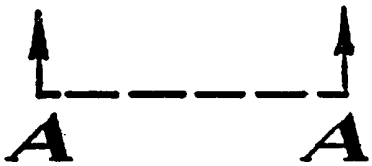

H. For identification of points, holes, surfaces, etc. that are not identified with datum letter. The description (point, hole, surface, etc.), 3.5 mm (formerly 4) high should always precede the letter. A hand lettered, 3.5 mm (formerly 4) high plain letter, with quote marks, should be used for this purpose. The above also applies to CAD drawings, except a plain letter with quote marks of default height will be used. (In notes, the text and the plain letter with the quote marks will also be the same height.)

LETTERING AND LINE CONVENTION

J. FORMER PRACTICE: Auxiliary views which cannot be drawn as direct projections should be designated as follows:

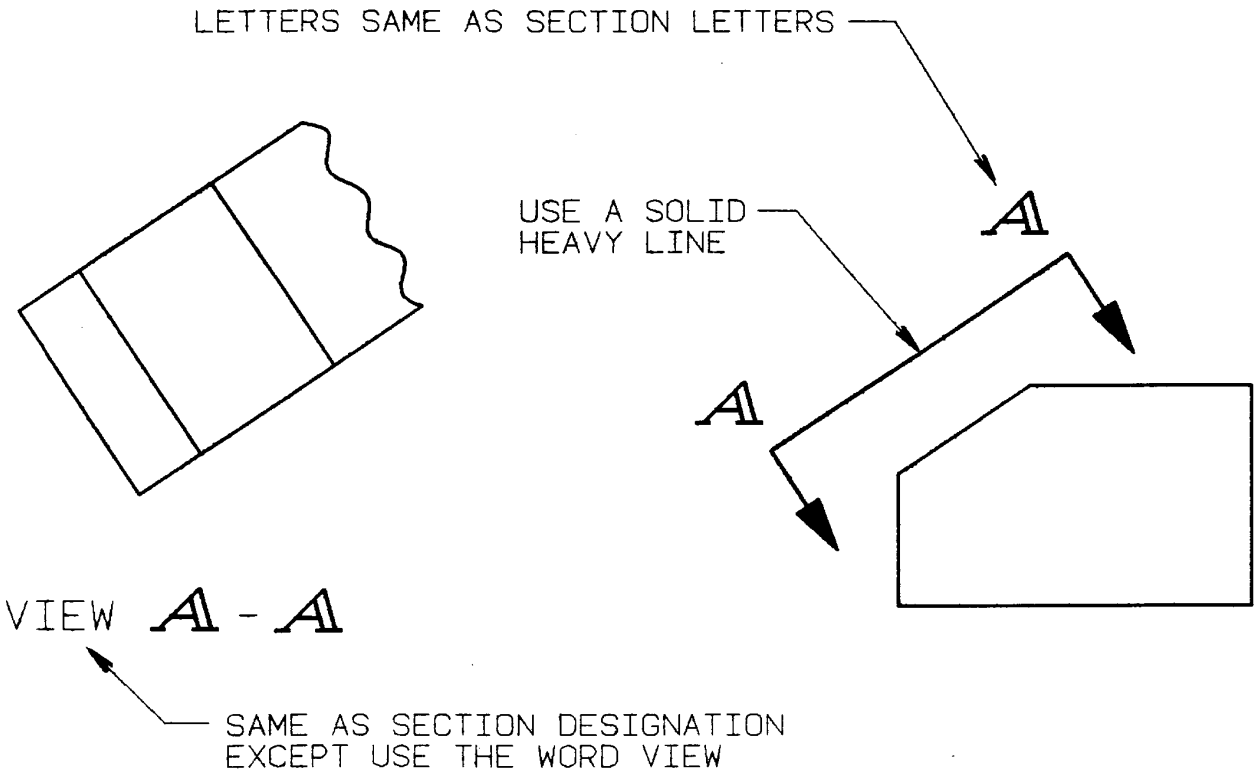

K. The detail view indicator may take any convenient shape. It should be drawn approximately the same weight as an object line. The letter and leader are required only if there are two or more on the drawing.

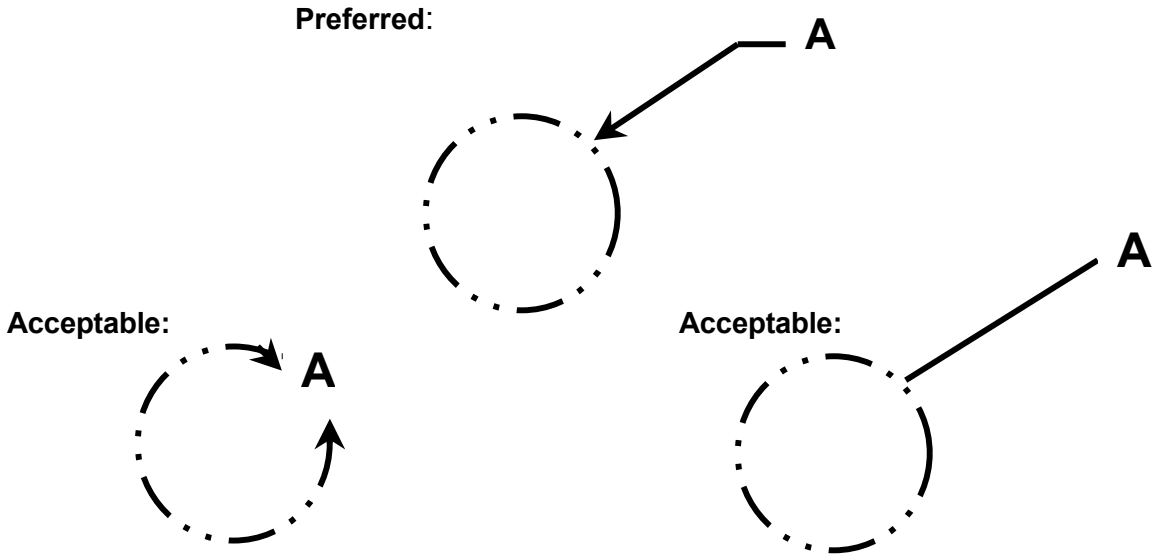

LETTERING AND LINE CONVENTION

L. Parting lines should be a series of dash lines, approximately 10.0 mm in length, spaced approximately 2.0 mm apart. The line weight should be the same as an object line.

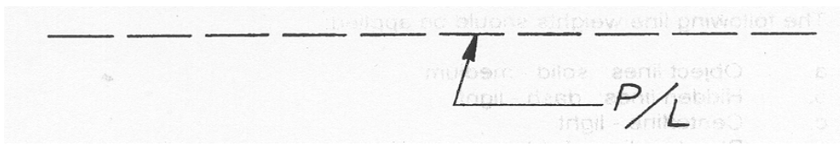

M. Lettering on metric drawings:

1. Capital letters, used for notes and dimensions should be 3.5 mm (formerly 4) high.

2. Lower case letters are used for certain abbreviations and thread designations as shown in the example below:

   a. abbreviations - mm, cm, kg, Nm, kPa

   b. thread designations - M4.5 x 0.75 - 6g
      M24 x 2 – 6H

DRAWING CONVENTIONS

	PREFERRED	ACCEPTABLE
DIAMETER DESIGNATION	∅ 3.85	3.85 DIA EXCEPT IN GD + T FEATURE CONTROL FRAME
DIMENSION LEADERS	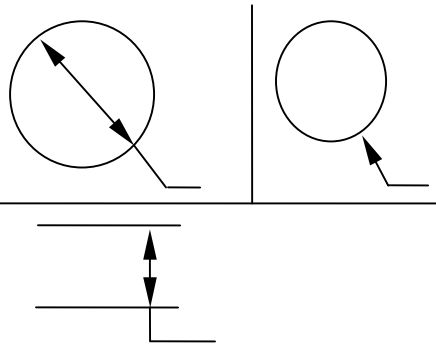	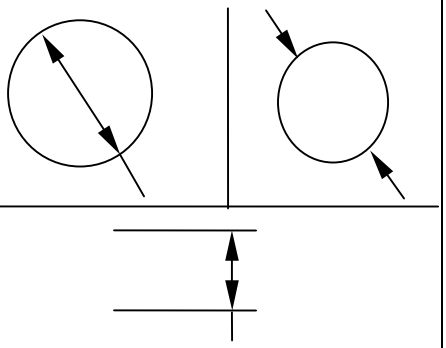
LINE BREAK AT ARROWHEAD	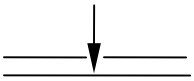	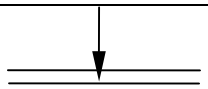 NOTE: REQUIRES SOLID ARROWHEADS
ANGLE DIMENSION LEADER	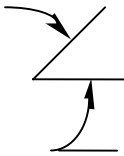 30°	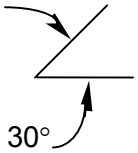 30°
TWO LINE CALLOUT OR DIM. PLACEMENT	1.5 - 1.8 THRU 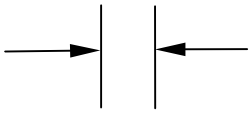	1.5 - 1.8 THRU 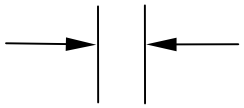
LEADER FROM RIGHT HAND SIDE OF NOTE	0.2 MIN. AFTER BENDING - 2 PLACES 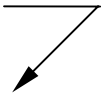	0.2 MIN. AFTER BENDING - 2 PLACES 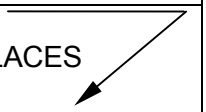

When printed, this document is uncontrolled.
When printed, this document is uncontrolled.

PART PROPERTIES

Part mass, surface area, and volume will be shown on drawings of piece parts produced by casting, molding, punch press and screw machine, and may be shown on other drawings if there is a specific request or reason. For purchased parts, this will apply only when it is known that the part is plated or coated by Delphi. This information is provided as reference data and should be identified as such.

The standard properties block will be added with the Part Properties program and placed in the general notes area near the title block. The secondary choice of location is farther to the left near the bottom border.

For charted parts, the properties will be included on the grid sheet, or, if there is no grid sheet, tabulated on the drawing.

The properties block should be added when the drawing is first created. Mass, surface area, and volume must be revised if revisions to the model affect those properties.

The properties box will not be added to drawings already production released unless specifically authorized by a CN.

RECORDING DRAWING REVISIONS

1. Descriptions and specifications for the lettered items below are found on subsequent pages.

2. Effective 03DE94, all new and revised drawings utilize numerical revision symbols rather than alphabetic.

3. For recording revisions on multi-sheet and chart dwgs. See B-3.9, D.1 thru 5, and B-3.10, E.

4. Revision dates with PEM authorization: drawing completion date; with CN authorization: CN creation date.

	DWG STATUS					ZONE	REVISION HISTORY	AUTH	DR	APVD 1	APVD 2
	DATE	STG	REV	N/P	CHG						
a	11FE99	R	001		-	B1	PICTORIALLY REVISED TO SHOW LATEST RETAINER ASM	XXXXX XXXXX	ABC	-	DEF
b											
c	09FE99	R	002		-	-	REVISED AND REDRAWN	XXXXX XXXXX	BCD	-	CDE
d	10FE99	R	-		-	-	REDRAWN NO CHANGE	-	EFG	-	FGH
			002								
e	12FE99	R	002		A	C7	1.25 DIM ADDED				
					B	D4	1.25 DIM REMOVED				
					C	D6	1.30 WAS 1.25	XXXXX XXXXX	GHJ	-	HJK
f											
	13FE99	R	003		A	C7	PLATING NOTE ADDED				
					B	D4	THREAD NOTE REMOVED				
					C	D6	IDENTIFICATION NOTE REVISED	XXXXX XXXXX	JKL	-	KLM
g											
	11FE99	R	004		-	C9	1.60 DIA WAS 1.56 DIA	69227 -1	LMN	-	MNP

RECORDING DRAWING REVISIONS

	DWG STATUS					ZONE	REVISION HISTORY	AUTH	DR	APVD 1	APVD 2
	DATE	STG	REV	N/P	CHG						
	11FE98	R	005		A	B8	CHOKE LEVER ADDED				
h					B	C7	IDLE COMP REMOVED				
					C	D9	THROTTLE LEVER REVISED	XXXXX XXXXX	ABC	-	BCD
J	09FE98	R	006		A	B7	17050123 ADDED				
					B	D8	17050234 REMOVED				
					C	D4	17050345 REVISED				
					D	C8	17050455 WAS 17050456	XXXXX XXXXX	CDE	-	DEF
k											
	09JA98	R	006		A	-	PLATING NOTE REVISED				
XXXXXXXXXX 10FE98					B	-	WAS 15				
					C	-	WAS 2.62 DIA	32156	RST	STF	TSG
l											
	26AP02	U	001		-	-	DRAWING CREATED	XXXXX XXX	-	-	-
m											
	11FE98	R	007		-	C9	⊥ 0.15 A WAS ⊥ 0.20 A	XXXXX XXXXX	JKL	-	KLM
n											
	13FE98	R	008		-	C7	PICTURE UPDATED	XXXXX XXXXX	LMN	-	MNP

RECORDING DRAWING REVISIONS

p

REVISED	
REV & RETYPED	
34567	11NO78

r

45678	11NO78

s

PART NO.	LINE	REVISION	DATE	NO.	BY
17056789	11	WAS....	11NO78	45678	RCS
17077141	15	REVISED	30MR81	56714	[illegible]
17084200, 211, 229, 17085233, 237, 239, 250	1	FIG. 28 ADDED	22NO82	67233	[illegible]

t

REVISION	DATE	NO.	BY
17056789 COL X	11NO78	45678	RCS

RECORDING DRAWING REVISIONS

	DWG STATUS					ZONE	REVISION HISTORY	AUTH	DR	APVD 1	APVD 2
	DATE	STG	REV	N/P	CHG						
u	20JA98	R	-	-	-	-	REDRAWN NO CHANGE EXCEPT WAS SIZE A2 LAST REV DDMMYY	-	RSC	-	EFG
			002								
v	20JA98	R	-	-	-	-	REDRAWN NO CHANGE EXCEPT WAS MANUAL DWG LAST REV DDMMYY	-	RSC	-	EFG
			002								
w	20JA98	R	-	-	-	-	REDRAWN NO CHANGE EXCEPT WAS MANUAL SIZE A2 DWG LAST REV DDMMYY	-	ABC	-	BCD
			002								
x	01MY98	U	002	-	-		MATERIAL WAS M1508 APVD BY _____	-	CDE	-	DEF
z	20JA05	U	003	-	-	-	PART PROMOTED TO DEVELOPMENT STAGE THRU REV 002	XXXXX XXXXX	EFG	-	FGH
	20JA05			-	-	-	DEVELOPMENT REL	XXXXX XXXXX	-	-	CDE
aa	01MY05	U	004	-	-	-	PART PROMOTED TO PROTOTYPE STAGE THRU REV 003	XXXXX XXXXX	GHJ	-	HJK
	01MY05			-	-	-	PROTOTYPE REL	XXXXX XXXXX	-	-	JKL
ac	26AP02	U	004		-	-	DRAWING CREATED PRIOR REVISIONS WERE TO MATH MODEL ONLY	XXXXX XXX	-	-	-

RECORDING DRAWING REVISIONS

a. Lettering should be 3 mm high.

b. Spaces between text and horizontal lines should be 1.5 mm.

c. Drawing redrawn by a change notice.

d. Drawing redrawn without a change notice (No revision permitted.)

*e. Dimensional revisions (adding, removing, and revising).

*f. Note revisions (adding, removing, and revising). The type of note should be stated.

g. Recording supplements (add a dash number to the change notice number). This was used with the former system but is not used with the current system.

*h. Assembly drawing part changes where the part number does not appear on the drawing. The name of the part must be stated.

*j. Experimental assembly drawing part changes where the part number does appear on the drawing.

k. Recording change notice number on customer drawings - On all customer drawings, add change notice number and date adjacent to the latest customer recording.

l. Initial recording when an experimental or pre-production drawing is developed from a PEM. The PEM number in the authority column gives reference to the origination of the design.

m. Where geometric symbols are used in place of notes, the revision records should contain the original symbols. The symbol block in the revision column should be approximately 4.5 mm high.

n. Picture changes will be made on all affected drawings and sheets. A single recording is made, but without change circles. Additional description may be added for clarity, such as: PICTURE UPDATED PER CASTING CHANGE, WELD AREA PICTURE UPDATED, PICTURE UPDATED PER COMPONENT CHANGES.

p. Revised and retyped EMI's and Material Specs should show the notation REV & RETYPED followed by the CN and date. This information should be typed in the revision column.

*One revision symbol will be used per drawing, per authorized change. If a larger number of revisions are made, or an extensive redesign occurs, a single revision record may be used to summarize the activity; e.g. BOSS ADDED, or BAFFLE REDESIGNED.

RECORDING DRAWING REVISIONS

r. When making revisions to EMI's and Material Specs., the CN and date must be typed in the revision column.

s. On CAD drawings (chart grid sheets), a column is provided for and a revision symbol required per CAD file naming conventions. On manual chart grid sheets (100% GRID), no change letter is used. For part numbers changes, a description of the change is not given in the revision column but the word ADDED, REMOVED or REVISED is entered following the line number. The method is the same if multiple part numbers are affected. For changes other than part numbers, such as dimensions, the old information is recorded in the revision column to describe the change.

t. Test specifications sheets - no revision symbol required on manual grid type test specification sheets. Only the model number and column affected should be recorded, it is not necessary to record the revision.

u. Drawing redrawn without a CN and format size changed (otherwise no revisions permitted). The recording is added to all sheets. Size may be designated as a numeral or a letter whichever is appropriate. The revision date is the actual date of redraw. The revision record includes the date of the last authorized change. The next revision symbol is placed below the redraw recording (sheet one only). For obsoleting the old - see page titled OBSOLETING DRAWINGS.

**v. Drawing redrawn without a CN by creating a CAD drawing (otherwise no revisions permitted). The recording is added to all sheets. The former drawing type: MANUAL or other CAD system, should be noted in the revision column. The revision date is the actual date of redraw. The revision record includes the date of last authorized change. The next revision symbol is placed below the redraw recording (sheet one only). For obsoleting the old - see page titled OBSOLETING DRAWINGS.

**w. Drawing redrawn without a CN by creating a CAD drawing and the format size changed (otherwise no revisions permitted). The recording is added to all sheets. The former drawing type: MANUAL or other CAD system, and the former size should be noted in the revision column. Size may be designated as a numeral or a letter, whichever is appropriate. The revision date is the actual date of redraw. The revision record includes date of last authorized change. The next revision symbol is placed below the redraw recording (sheet one only). For obsoleting the old - see page titled OBSOLETING DRAWINGS.

x. When the material specification and/or process specification(s) (including heat treatments, platings, paint, etc.) are changed on an experimental drawing, the change is recorded in the revision history with the name (typed) of the approving materials engineer. (For production see E120NY.)

** Notify ETDM Drawing Revision Service with a note or print so that GES can be updated (no need to plot a drawing solely for this purpose).

RECORDING DRAWING REVISIONS

y. FORMER PRACTICE: For drawings that will be tracked in Anderson-based engineering systems, a D-Spec number is recorded on all sheets as shown below for Engineering Release and for all subsequent authorized revisions.

DWG STATUS					ZONE	REVISION HISTORY	AUTH	DR	CK	APVD
DATE	STG	REV	CHG	N/P						
-	U	000	-	-	-	PEM AX550A06	-	-	-	-
25JA98	U	001	A	-	G7	19.5 WAS 25.0				
			B		E6	7.2 WAS 6.50	XXXXX	CDE	-	ABC
06FE98	U	002	-	-	-	DES LVL ADV TO B	XXXXX	ABC	-	BCD
06FE98	U	003	-	-	D11	FLANGE ADDED	XXXXX	BCD	-	ABC
12MR98	U	004	-	-	-	REL TO PROD THRU REV 003 ON XXXXX	-	BCD	-	ABC
12MR98	R		-	-	-	ENGRG REL	XXXXX	-	-	EFG
-			-	-	-	D-SPEC ENGRG REL	XXXXXX	-	-	-
23MR98	R	005	A	-	F6	18.3 WAS 17.9				
			B		F7	RADIUS ADDED	XXXXX			
			C		-	D-SPEC ENGRG REL	XXXXXX	DEF	-	CDE

D-SPEC NUMBER

SHEET NUMBER	DRAWING NUMBER	DWG STATUS			SIZE
		STG	REV	N/P	
1 OF 1	17099998	R	005	-	A2

RECORDING DRAWING REVISIONS

z. Pre-production Quote Stage part promoted to Development Stage. The design level identifier is dropped and a new, production numbered drawing is created, to which is added the DEVELOPMENT REL recording (all sheets). The authorization is a CN . The CAD naming convention for Development Stage is a DLS/PLS of VL.

aa. Pre-production Quote <u>or</u> Development Stage part promoted to Prototype Stage. If Quote Stage, the design level identifier is dropped and a new, production numbered drawing is created, to which is added the PROTOTYPE REL recording (all sheets). If Development Stage, both recordings are added to the single drawing. The authorization is a CN. The CAD naming convention for Prototype Stage is a DLS/PLS of TY.

ab. Drawing redrawn without a CN to replace the drawing format with the latest approved format (otherwise no revisions permitted). A minimum of five (5) lines of revision history is carried over. Consult the design responsible engineer for specific revision history retention requirements.

ac. Initial recording on all sheets when a pre-production or experimental drawing is created at a revision level other than 00 because only the math model had been maintained before. For a production drawing, the STG would be R, and the authorization would be an EWO number.

ad. Initial recording on all sheets when a drawing is created for a part removed from a chart.

	DWG STATUS					ZONE	REVISION HISTORY	AUTH	DR	APVD 1	APVD 2
	DATE	STG	REV	N/P	CHG						
ab	24AP97	R			-	-	NO CHG EXCEPT DWG FORMAT UPDATE	-	BCD	-	CDE
ad	15JA03	R	*		-	-	DRAWING CREATED PART WAS ON CHART XXXXXXXX	XXXXX XXXXX	-	-	-
							* equal to chart revision that removes the part				

CHANGE CIRCLES

Change circles may be used to clarify the location of individual changes that occurred due to an authorized revision.

A. Change circles are to be 10.0 mm diameter for one or two digit revision symbol and 14.0 mm for three digits. (Acceptable alternate: 8.0 mm diameter for single digit.)

B. Where necessary, the change circle should be placed as closely as possible to the affected area.

C. Change circles are not necessary when adding or removing views or sections, or when revisions are made to the title block, (e.g. material specs., sheet number, etc.). When a section or view is removed, any change circle associated with that section or view should also be removed. Change circles are not required on grid sheets where part and line numbers identify the changes, or for numbered notes in the body of the drawing (not general notes).

D. 1. On drawings larger than “C” size that do not have zones on the format, a duplicate circle should be placed in the upper or lower border of the drawing.

2. When zones are used, it is not necessary to show change circles in the border of the drawing but they may be used in the body of the drawing.

E. Any drawing revisions made on drawings that have zones on the format should have the zone <u>letter</u> shown first in the zone column

OBSOLETING DRAWINGS

An approved CN is necessary to obsolete a production drawing. The appropriate recording is added to all sheets of a drawing.

1. With older drawing format
   a. Because of no usage
   b. Redrawn drawing
   c. Replaced by customer's or supplier's revised drawing (no revision symbol)
   d. Added to a chart with revisions
   e. Added to a chart with no revisions

	DATE	SYM	ZONE	REVISION RECORD	AUTHORITY	DR	APVD
a	04FE05	004	-	OBSOLETE NOT USED	XXXXX XXXXX	RSC	EG
b	04FE05	007	-	OBSOLETE REVISED & REDRAWN	XXXXX XXXXX	RSC	EG
c	04FE05	-	-	OBSOLETE SEE NEW COPY	XXXXX XXXXX	RSC	EG
d	07FE05	003	-	OBSOLETE REVISED & REDRAWN & ADDED TO CHART XXXXXXXX	XXXXX XXXXX	MGH	NF
e	07FE05	005	-	OBSOLETE REDRAWN & ADDED TO CHART XXXXXXXX	XXXXX XXXXX	MGH	NF

OBSOLETING DRAWINGS

1. With newer drawing format
   - f. Because of no usage
   - g. Redrawn drawing
   - h. Replaced by customer's or supplier's revised drawing (no revision symbol)
   - j. Added to a chart with revisions
   - k. Added to a chart with no revisions

	DWG STATUS					ZONE	REVISION HISTORY	AUTH	DR	APVD 1	APVD 2
	DATE	STG	REV	N/P	CHG						
f	04FE05	R	004		-	-	OBSOLETE NOT USED	XXXXX XXXXX	ABC	-	BCD
g	12MY05	R	006		-	-	OBSOLETE REVISED AND REDRAWN	XXXXX XXXXX	FGH	-	GHJ
h	04FE05	R			-	-	OBSOLETE SEE NEW COPY	XXXXX XXXXX	DEF	-	DEF
J	22JA05	R	002		-	-	OBSOLETE REVISED AND REDRAWN AND ADDED TO CHART XXXXXXXX	XXXXX XXXXX	HJK	-	JKL
k	17MR05	R	005		-	-	OBSOLETE REDRAWN AND ADDED TO CHART XXXXXXXX	XXXXX XXXXX	KLM	-	LMN

OBSOLETING DRAWINGS

2. Redrawn without change (a. thru d. show older format)
   a. Redrawn drawing (no revisions permitted)
   b. Redrawn drawing - format size changed (otherwise no revisions permitted)
   c. Manual or UGMX drawing redrawn by creating an NX drawing (otherwise no revisions permitted).
   d. Manual or UGMX drawing redrawn by creating an NX drawing and the format size changed (otherwise no revisions permitted).
   e. Redrawn drawing (no revisions permitted)
   f. Redrawn drawing - format size changed (otherwise no revisions permitted)

	DES LVL	DATE	SYM	ZONE	REVISION RECORD	AUTHORITY	DR	APVD
a.		04FE87	004	--	OBSOLETE REDRAWN NO CHANGE	--	ABC	BCD
b.		20JA94	005	--	OBSOLETE REDRAWN NO CHANGE EXCEPT NEW SIZE IS 1	--	CDE	DEF
c.		15MR93	006	--	OBSOLETE REDRAWN NO CHANGE EXCEPT NEW DRAWING IS UG	--	EFG	FGH
d.		23AP92	007	--	OBSOLETE REDRAWN NO CHANGE EXCEPT NEW DRAWING IS SIZE 2 UG	--	GHJ	HJK

	DWG STATUS					ZONE	REVISION HISTORY	AUTH	DR	APVD 1	APVD 2
	DATE	STG	REV	N/P	CHG						
e	04FE97	R	008		-	-	OBSOLETE REDRAWN NO CHANGE	-	ABC	-	BCD
f	19MY97	R	009		-	-	OBSOLETE REDRAWN NO CHANGE EXCEPT NEW SIZE IS A1	-	CDE	-	DEF

REINSTATING DRAWINGS

An approved CN is necessary to reinstate a production drawing. The obsolete recording will be rewritten (omit drafter and approver initials) and the next revision symbol used. Then a revision symbol and the word REINSTATED with the CN number and date are recorded.

DWG STATUS					ZONE	REVISION HISTORY	AUTH	DR	APVD 1	APVD 2
DATE	STG	REV	N/P	CHG						
04FE94	R	003		-	-	OBSOLETED	XXXXX XXXXX	-	-	-
12MY97	R	004		-	-	REINSTATED	XXXXX XXXXX	FGH	-	GHJ

When a drawing has been obsoleted and destroyed, but has to be reinstated, the following procedure will prevail:

1. A print of the obsoleted original that was destroyed at the time of obsoleting will accompany the change. (Obtain a print from the microfilm card of the obsolete original).

2. The redrawn original should be recorded as follows:

DWG STATUS					ZONE	REVISION HISTORY	AUTH	DR	APVD 1	APVD 2
DATE	STG	REV	N/P	CHG						
04FE94	R	003		-	-	OBSOLETED	XXXXX XXXXX	ABC	-	BCD
19MY97	R	-		-	-	REDRAWN NO CHANGE	-	CDE	-	DEF
19MY97	R	004		-	-	REINSTATED	XXXXX XXXXX	EFG	-	FGH

DESIGN LEVEL IDENTIFIER

A. General

1. Design level identifiers provide the capability for tracking the evolution of design before production release by identifying specific stages of design development while maintaining one basic part number.

2. Before production release, all product parts will be identified with a part number that includes a design level identifier (DLI) letter (except that I, O, Q, S, X, and Z will not be used). Such a number may be referred to as a suffix part number (SPN). Chart drawings, test specifications, test fixtures, and Unigraphics feature files are not product parts and will not utilize the DLI numbering system. For definition see PART NUMBERS, beginning on page C - 8.1.

3. The design level may change only when authorized by the responsible design engineer and the customer. Part number 17099999A can change to 17099999B only with the above authorization. When a design level change is authorized, the creation of the new design level will be recorded on the current design level drawing, and that drawing will be retained in the active product file. A copy of that drawing will be made, and the design changes will be made on the copy. The Revision Block from the current copy will be retained on the new copy. The changes will be recorded on the new copy and the next DLI letter will be entered in the DRAWING NO. in the title block.

4. The REVISED AND REDRAWN method will not be used on SPN drawings except when adding a sheet to the middle of a chart (see B-6.1).

5. When a copy of an experimental drawing is used for a new design level or a production release drawing, the copy is, in fact, a new and separate drawing. THEREFORE, ENTRIES IN THE TITLE BLOCK SHOULD BE MADE AS THEY ARE ON ANY NEW DRAWING. For production release, also see E120NY.

6. Drawing changes that do not affect interchangeability (fit, form, function, or performance) can be made without changing the design level. But they should be approved by the responsible design engineer, and they must be recorded in the Revision Block and identified with a REVISION SYMBOL.

7. If and when a part is released for production, the release will be recorded in the Revision Block on the drawing for the design level being released, and that drawing will be retained in the active product file. A copy will be made of that drawing and the copy will be the released drawing. The DLI will be removed from the part number in the DRAWING NO. block, leaving the eight digit part number, the original basic part number, which becomes the production part number.

DESIGN LEVEL IDENTIFIER

8. All drawing revisions and all changes in design level will be recorded per procedures described in items that follow.

Item C below:	Revision Records, Single Sheet Drawing
Item D below:	Revision Records, Multi-Sheet Drawing
Item E below:	Revision Records, Chart Drawing

B. Revision Records, Full Record Column

1. When the Revision Block column is full, the entries in the column should be scrolled upward to provide sufficient space for the required additional entries at the bottom. This will present the maximum amount of part history on the current drawing. For examples, see C.6 and D.12 below.

2. The new top entry in the Revision Block that results after scrolling should be complete. i.e.: If revision 007 is described in three lines, those three lines should not be split. Remove all of revision 007 and make revision 008 the top entry if there is not enough space to retain all of revision 007.

3. When a revision and its symbol are removed from the record, be sure to remove all related symbols and circles from the field of the drawing.

DESIGN LEVEL IDENTIFIER

C. Revision Records, Single Sheet Drawing

The following example illustrates drawing PART NO. blocks and REVISION RECORDS that identify and detail the stages of design level evolution of a part drawing. The example describes a fictitious part with an unassigned PART NO. 17099998.

1. 17099998A REV 001

   This is a new drawing. A new experimental drawing will always begin with A as the design level identifier.

DWG STATUS					ZONE	REVISION HISTORY	AUTH	DR	APVD 1	APVD 2
DATE	STG	REV	N/P	CHG						
06JA02	U	001		-	-	DRAWING CREATED	XXXXX XXX	-	-	-

DRAWING NUMBER						
17099998A						
SIZE	SCALE	FRAME NO	SHEET NO	STG	REV	N/P
A2	(1:1)	1 OF 1	1 OF 1	U	001	

2. 17099998A REV 003

   Drawing revisions not affecting interchangeability (fit, form, function, or performance) are made. The revisions are made on drawing 17099998A REV 001, the drawing for design level A. They are recorded as drawing revisions 002 and 003. There is no change in design level. When design level B is authorized, a note is added as shown in drawing revision 004 before the copy is made that will be the basis for the design level B drawing.

DWG STATUS					ZONE	REVISION HISTORY	AUTH	DR	APVD 1	APVD 2
DATE	STG	REV	N/P	CHG						
06JA02	U	001		-	-	DRAWING CREATED	XXXXX XXX	-	-	-
11JA02	U	002		-	C5	1.8 WAS 2.0	XXXXX XXX	BCD	-	CDE
18JA02	U	003		-	D6	ADDED	XXXXX XXX	DEF	-	EFG
25JA02	U	004		-	-	DES LVL ADV TO B	XXXXX XXX	FGH	-	GHJ

DRAWING NUMBER						
17099998A						
SIZE	SCALE	FRAME NO	SHEET NO	STG	REV	N/P
A2	(1:1)	1 OF 1	1 OF 1	U	004	

NOTE: The recording in the AUTHORITY column will be the appropriate PEM number.

DESIGN LEVEL IDENTIFIER

3. 17099998B REV 005
Revisions that constitute a change in design level have been authorized. The revisions will be made on a copy of 17099998A REV 004. The revisions will be recorded as drawing revision 005. The new design level will be design level B. Part number 17099998B is not interchangeable with 17099998A. When design level C is authorized, a note is added as shown in drawing revision 006 before the copy is made that will be the basis for the design level C drawing.

NOTE: Revision block information from 17099998A remains.

DWG STATUS					ZONE	REVISION HISTORY	AUTH	DR	APVD 1	APVD 2
DATE	STG	REV	N/P	CHG						
06JA02	U	001		-	-	DRAWING CREATED	XXXXX XXX	-	-	-
11JA02	U	002		-	C5	1.8 WAS 2.0	XXXXX XXX	BCD	-	CDE
18JA02	U	003		-	D6	ADDED	XXXXX XXX	DEF	-	EFG
25JA02	U	004		-	-	DES LVL ADV TO B	XXXXX XXX	FGH	-	GHJ
25JA02	U	005		A	D8	25.3 WAS 25.0				
				B	E6	6.25 WAS 6.50	XXXXX XXX	HJK	-	JKL
08FE02	U	006		-	-	DES LVL ADV TO C	XXXXX XXX	KLM	-	LMN

DRAWING NUMBER						
17099998A						
SIZE	SCALE	FRAME NO	SHEET NO	STG	REV	N/P
A2	(1:1)	1 OF 1	1 OF 1	U	006	

NOTE: The recording in the AUTHORITY column will be the appropriate PEM number .

DESIGN LEVEL IDENTIFIER

4. 17099998C REV 007

A revision that constitutes a change in design level has been authorized. The revision will be made on a copy of 17099998B REV 006. The revision will be recorded as drawing revision 007. The new design level will be design level C.

NOTE: Revision block information from 17099998B remains.

DWG STATUS					ZONE	REVISION HISTORY	AUTH	DR	APVD 1	APVD 2
DATE	STG	REV	N/P	CHG						
06JA02	U	001		-	-	DRAWING CREATED	XXXXX XXX	-	-	-
11JA02	U	002		-	C5	1.B WAS 2.0	XXXXX XXX	BCD	-	CDE
18JA02	U	003		-	D6	ADDED	XXXXX XXX	DEF	-	EFG
25JA02	U	004		-	-	DES LVL ADV TO B	XXXXX XXX	FGH	-	GHJ
25JA02	U	005		A	D8	25.3 WAS 25.0				
				B	E6	6.25 WAS 6.50	XXXXX XXX	HJK	-	JKL
08FE02	U	006		-	-	DES LVL ADV TO C	XXXXX XXX	KLM	-	LMN
08FE02	U	007		-	E7	3.65 WAS 3.5	XXXXX XXX	MNP	-	NPR

DRAWING NUMBER						
17099998A						
SIZE	SCALE	FRAME NO	SHEET NO	STG	REV	N/P
A2	(1:1)	1 OF 1	1 OF 1	U	007	

DESIGN LEVEL IDENTIFIER

5. 17099998C REV 008

A drawing revision not affecting interchangeability (fit, form, function, or performance) is made. The revision is made on 17099998C REV 007, the drawing for design level C. It is recorded as drawing revision 008. There is no change in design level. When design level D is authorized, a note is added as shown in drawing revision 009 before the copy is made that will be the basis for the design level D drawing. The REVISION BLOCK is now full.

DWG STATUS					ZONE	REVISION HISTORY	AUTH	DR	APVD 1	APVD 2
DATE	STG	REV	N/P	CHG						
06JA02	U	001		-	-	DRAWING CREATED	XXXXX XXX	-	-	-
11JA02	U	002		-	C5	1.8 WAS 2.0	XXXXX XXX	BCD	-	CDE
18JA02	U	003		-	D6	ADDED	XXXXX XXX	DEF	-	EFG
25JA02	U	004		-	-	DES LVL ADV TO B	XXXXX XXX	FGH	-	GHJ
25JA02	U	005		A	D8	25.3 WAS 25.0				
				B	E6	6.25 WAS 6.50	XXXXX XXX	HJK	-	JKL
08FE02	U	006		-	-	DES LVL ADV TO C	XXXXX XXX	KLM	-	LMN
08FE02	U	007		-	E7	3.65 WAS 3.5	XXXXX XXX	MNP	-	NPR
17FE02	U	008		-	D4	18.0 WAS 17.5	XXXXX XXX	PRS	-	RST
22FE02	U	009		-	-	DES LVL ADV TO D	XXXXX XXX	STU	-	TUV

BOTTOM OF
REVISION
BLOCK

DRAWING NUMBER						
17099998C						
SIZE	SCALE	FRAME NO	SHEET NO	STG	REV	N/P
A2	(1:1)	1 OF 1	1 OF 1	U	009	

DESIGN LEVEL IDENTIFIER

6. 17099998D REV 010

Revisions that constitute a change in design level have been authorized. The revisions will be made on a copy of 17099998C REV 009. The revisions will be recorded as drawing revision 010. The new design level will be design level D. To provide space for revisions 010 and 011, and to maintain the maximum amount of revision history, the revision records are scrolled up. When ENGINEERING RELEASE is authorized, a note is added as shown in drawing revision 011 before the copy is made that will be the basis for the production released drawing.

DWG STATUS					ZONE	REVISION HISTORY	AUTH	DR	APVD 1	APVD 2
DATE	STG	REV	N/P	CHG						
25JA02	U	004		-	-	DES LVL ADV TO B	XXXXX XXX	FGH	-	GHJ
25JA02	U	005		A	D8	25.3 WAS 25.0				
				B	E6	6.25 WAS 6.50	XXXXX XXX	HJK	-	JKL
08FE02	U	006		-	-	DES LVL ADV TO C	XXXXX XXX	KLM	-	LMN
08FE02	U	007		-	E7	3.65 WAS 3.5	XXXXX XXX	MNP	-	NPR
17FE02	U	008		-	D4	18.0 WAS 17.5	XXXXX XXX	PRS	-	RST
22FE02	U	009		-	-	DES LVL ADV TO D	XXXXX XXX	STU	-	TUV
22FE02	U	010		A	B6	4.9 WAS 4.7				
				B	C6	25.8 WAS 26.3	XXXXX XXX	UVW	-	VWX
25MR02	U	011		-	-	REL TO PROD THRU REV 010 ON XXXXXXXXXX	-	WXY	-	XYZ

CN CREATION DATE

BOTTOM OF REVISION BLOCK

DRAWING NUMBER						
17099998D						
SIZE	SCALE	FRAME NO	SHEET NO	STG	REV	N/P
A2	(1:1)	1 OF 1	1 OF 1	U	011	

DESIGN LEVEL IDENTIFIER

7. 17099998 REV 011

Engineering release for production has been authorized. The experimental part has evolved into a production part. The DLI will be removed from the part number. The part number change will be made on a copy of 17099998D REV 011. On this copy the DLI has been removed leaving 17099998 as the production part number. The STG column will show the letter R beginning with the ENGRG REL entry. All of the revision record that will fit on the copy has been retained.

DWG STATUS					ZONE	REVISION HISTORY	AUTH	DR	APVD 1	APVD 2
DATE	STG	REV	N/P	CHG						
08FE02	U	006		-	-	DES LVL ADV TO C	XXXXX XXX	KLM	-	LMN
08FE02	U	007		-	E7	3.65 WAS 3.5	XXXXX XXX	MNP	-	NPR
17FE02	U	008		-	D4	18.0 WAS 17.5	XXXXX XXX	PRS	-	RST
22FE02	U	009		-	-	DES LVL ADV TO D	XXXXX XXX	STU	-	TUV
22FE02	U	010		A	B6	4.9 WAS 4.7				
				B	C6	25.8 WAS 26.3	XXXXX XXX	UVW	-	VWX
25MR02	U	011		-	-	REL TO PROD THRU REV 010 ON XXXXXXXXXX	-	WXY	-	XYZ
25MR02	R			-	-	ENGRG REL	XXXXX XXXXX	-	-	ZAB

CN CREATION DATE

BOTTOM OF REVISION BLOCK

DRAWING NUMBER						
17099998						
SIZE	SCALE	FRAME NO	SHEET NO	STG	REV	N/P
A2	(1:1)	1 OF 1	1 OF 1	R	011	

NOTE: If changes are included at the time of production release, the changes are recorded with the same revision symbol as the REL TO PROD recording (example on page B-3.9.8.1, although for a multi-sheet drawing).

DESIGN LEVEL IDENTIFIER

If changes are included at the time of production release, and the changes affect only the production drawing, they are recorded with the same CN number, as shown below.

DWG STATUS					ZONE	REVISION HISTORY	AUTH	DR	APVD 1	APVD 2
DATE	STG	REV	N/P	CHG						
08FE02	U	006		-	-	DES LVL ADV TO C	XXXXX XXX	KLM	-	LMN
08FE02	U	007		-	E7	3.65 WAS 3.5	XXXXX XXX	MNP	-	NPR
17FE02	U	008		-	D4	18.0 WAS 17.5	XXXXX XXX	PRS	-	RST
22FE02	U	009		-	-	DES LVL ADV TO D	XXXXX XXX	STU	-	TUV
22FE02	U	010		A	B6	4.9 WAS 4.7				
				B	C6	25.8 WAS 26.3	XXXXX XXX	UVW	-	VWX
25MR02	U	011		-	-	REL TO PROD THRU REV 010 ON XXXXXXXXXX	-	WXY	-	XYZ
25MR02	R			-	-	ENGRG REL	XXXXX XXXXX	-	-	ZAB
25MR02	R	012		A	C6	10.7 WAS 10.5				
				B	F5	8.2 WAS 9.3				
				C	E7	5.6 WAS 5.5	XXXXX XXXXX	EFG	-	ZAB

CN CREATION DATE

SAME CN NUMBER

DRAWING NUMBER						
17099998						
SIZE	SCALE	FRAME NO	SHEET NO	STG	REV	N/P
A2	(1:1)	1 OF 1	1 OF 1	R	012	

NOTE: It is not necessary to save or plot production-released revision 011 in this example. Revision 012 would begin as a copy of pre-production design level revision 011.

DESIGN LEVEL IDENTIFIER

D. Revision Records, Multi-sheet Drawing

1. All drawing revisions and design level revisions should be recorded in the REVISION BLOCK on SHEET ONE.

   a. First used, reference, material spec, and EMI numbers will appear on sheet one only.

   b. Drawing date, drawing scale, approvers', design engineer's, and drafter's name or signature will appear on all sheets.

2. If the revision is actually made on SHEET ONE, the revision should be fully described in the REVISION BLOCK on SHEET ONE. The revision should be identified with the next consecutive REVISION SYMBOL.

3. If the revision is actually made on SHEET 2, the revision should be recorded in the REVISION BLOCK on SHEET ONE and SHEET 2. The revision should be recorded in the SHEET ONE REVISION BLOCK as follows: SEE SHEET 2. The revision should be identified with the next consecutive REVISION SYMBOL, that is, consecutive on SHEET ONE. In addition, the revision should be fully described in the REVISION BLOCK on SHEET 2. The revision should be identified on SHEET 2 with the same REVISION SYMBOL that was used for the revision on SHEET ONE. The DATE, SYM, AUTHORITY, DRAFTER'S initials, and APPROVER'S initials should appear with the revision on both SHEET ONE and SHEET 2. Revisions occurring on subsequent sheets should be recorded using the same method.

4. Because all revisions to a part will appear in the REVISION BLOCK on SHEET ONE the REVISION SYMBOLS in that record must be consecutive.

5. Revisions recorded on subsequent sheets may or may not be recorded with consecutive REVISION SYMBOLS because only those revisions that are actually made on a subsequent sheet will be described on that sheet.

DESIGN LEVEL IDENTIFIER

6. To provide the maximum amount of revision history on a part drawing, entries in the REVISION BLOCK should be scrolled upward when the REVISION BLOCK is full (ref. item B above, Revision Records, Full Record Column).

7. The example below illustrates possible REVISION and DRAWING NO. blocks for an experimental part drawing. The example illustrates a brand new drawing 17099999A REV 001. The drawing is composed of 3 sheets and it is at design level A. The design level, A, will appear as the ninth place character in the part number in the DRAWING NO. block on sheet one and all other sheets of the drawing.

DWG STATUS					ZONE	REVISION HISTORY	AUTH	DR	APVD 1	APVD 2
DATE	STG	REV	N/P	CHG						
10JA02	U	001		-	-	DRAWING CREATED	XXXXX XXX	-	-	-

DRAWING NUMBER						
17099999A						
SIZE	SCALE	FRAME NO	SHEET NO	STG	REV	N/P
A1	(1:1)	1 OF 1	1 OF 3	U	001	

On sheets 2 and 3:

DWG STATUS					ZONE	REVISION HISTORY	AUTH	DR	APVD 1	APVD 2
DATE	STG	REV	N/P	CHG						
10JA02	U	001		-	-	DRAWING CREATED	XXXXX XXX	-	-	-

DRAWING NUMBER						
17099999A						
SIZE	SCALE	FRAME NO	SHEET NO	STG	REV	N/P
A1	(1:1)	1 OF 1	2 OF	U	001	

(with respective sheet no.)

DESIGN LEVEL IDENTIFIER

8. The example below illustrates possible REVISION and DRAWING NO. blocks for the same drawing that is depicted immediately above. It remains at design level A, but drawing revisions 002 through 007 have been made. These revisions have been approved by the responsible design engineer. These revisions do not affect interchangeability (fit, form, function, or performance), therefore they are recorded as drawing revisions. There is no change in the design level. When design level B is authorized, a note is added in the REVISION BLOCK as shown in REV 008 before the copy is made that will be the basis for the design level B drawing.

DWG STATUS					ZONE	REVISION HISTORY	AUTH	DR	APVD 1	APVD 2
DATE	STG	REV	N/P	CHG						
10JA02	U	001		-	-	DRAWING CREATED	XXXXX XXX	-	-	-
17JA02	U	002		-	E8	HOLE ADDED	XXXXX XXX	ABC	-	CDE
24JA02	U	003		-	-	SEE SH 3	XXXXX XXX	BCD	-	ABC
31JA02	U	004		A	-	SEE SH 2				
				B	C6	WAS 3 PLACES	XXXXX XXX	CDE	-	BCD
14FE02	U	005		-	D7	3.2 WAS 2.5	XXXXX XXX	CDE	-	DEF
21FE02	U	006		-	-	SEE SH 2	XXXXX XXX	BCD	-	ABC
28FE02	U	007		A	-	SEE SH 3				
				B	F5	12.0 ADDED	XXXXX XXX	EFG	-	FGH
14MR02	U	008		-	-	DES LVL ADV TO B	XXXXX XXX	GHJ	-	HJK

NOTE: The recording in the AUTHORITY column will be the appropriate PEM number.

DESIGN LEVEL IDENTIFIER

Applicable revision recordings will be made on sheets 2 and 3 of 17099999A:

DWG STATUS					ZONE	REVISION HISTORY	AUTH	DR	APVD 1	APVD 2
DATE	STG	REV	N/P	CHG						
10JA02	U	001		-	-	DRAWING CREATED	XXXXX XXX	-	-	-
31JA02	U	004		-	D6	6.7 WAS 7.5	XXXXX XXX	CDE	-	BCD
21FE02	U	006		-	E5	18.0 ADDED	XXXXX XXX	BCD	-	ABC

DRAWING NUMBER						
17099999A						
SIZE	SCALE	FRAME NO	SHEET NO	STG	REV	N/P
A1	(1:1)	1 OF 1	2 OF	U	006	

DWG STATUS					ZONE	REVISION HISTORY	AUTH	DR	APVD 1	APVD 2
DATE	STG	REV	N/P	CHG						
10JA02	U	001		-	-	DRAWING CREATED	XXXXX XXX	-	-	-
24JA02	U	003		-	F5	26.8 WAS 25.5	XXXXX XXX	BCD	-	ABC
28FE02	U	007		-	D6	Ø 7.5 WAS Ø 8.0	XXXXX XXX	EFG	-	FGH

DRAWING NUMBER						
17099999A						
SIZE	SCALE	FRAME NO	SHEET NO	STG	REV	N/P
A1	(1:1)	1 OF 1	3 OF	U	007	

NOTE: The recording in the AUTHORITY column will be the appropriate PEM number.

DESIGN LEVEL IDENTIFIER

9. The example below illustrates possible REVISION and DRAWING NO. blocks for the drawing when changes to the part cause a change in the design level. Part number 17099999B REV 009 is defined by a new and separate drawing composed of 3 sheets. These sheets were copies of 17099999A REV 008. The part is now at design level B, having been authorized by the responsible design engineer and the customer. Part number 17099999B is not interchangeable with 17099999A. The revision record from design level A has been retained. The revisions that caused the change in design level are recorded as revision 009. When design level C is authorized, a note is added in the REVISION BLOCK as shown in revision 010 before the design level C copy is made.

DWG STATUS					ZONE	REVISION HISTORY	AUTH	DR	APVD 1	APVD 2
DATE	STG	REV	N/P	CHG						
10JA02	U	001		-	-	DRAWING CREATED	XXXXX XXX	-	-	-
17JA02	U	002		-	E8	HOLE ADDED	XXXXX XXX	ABC	-	CDE
24JA02	U	003		-	-	SEE SH 3	XXXXX XXX	BCD	-	ABC
31JA02	U	004		A	-	SEE SH 2				
				B	C6	WAS 3 PLACES	XXXXX XXX	CDE	-	BCD
14FE02	U	005		-	D7	3.2 WAS 2.5	XXXXX XXX	CDE	-	DEF
21FE02	U	006		-	-	SEE SH 2	XXXXX XXX	BCD	-	ABC
28FE02	U	007		A	-	SEE SH 3				
				B	F5	12.0 ADDED	XXXXX XXX	EFG	-	FGH
14MR02	U	008		-	-	DES LVL ADV TO B	XXXXX XXX	GHJ	-	HJK
14MR02	U	009		A	C8	23.5 WAS 22.0				
				B	-	SEE SH 3	XXXXX XXX	GHJ	-	HJK
05AP02	U	010		-	-	DES LVL ADV TO C	XXXXX XXX	CDE	-	BCD

DRAWING NUMBER						
17099999B						
SIZE	SCALE	FRAME NO	SHEET NO	STG	REV	N/P
A1	(1:1)	1 OF 1	1 OF 3	U	010	

DESIGN LEVEL IDENTIFIER

On sheets 2 and 3 of 17099999B:

DWG STATUS					ZONE	REVISION HISTORY	AUTH	DR	APVD 1	APVD 2
DATE	STG	REV	N/P	CHG						
10JA02	U	001		-	-	DRAWING CREATED	XXXXX XXX	-	-	-
31JA02	U	004		-	D6	6.7 WAS 7.5	XXXXX XXX	CDE	-	BCD
21FE02	U	006		-	E5	18.0 ADDED	XXXXX XXX	BCD	-	ABC

DRAWING NUMBER						
17099999B						
SIZE	SCALE	FRAME NO	SHEET NO	STG	REV	N/P
A1	(1:1)	1 OF 1	2 OF	U	006	

DWG STATUS					ZONE	REVISION HISTORY	AUTH	DR	APVD 1	APVD 2
DATE	STG	REV	N/P	CHG						
10JA02	U	001		-	-	DRAWING CREATED	XXXXX XXX	-	-	-
24JA02	U	003		-	F5	26.8 WAS 25.5	XXXXX XXX	BCD	-	ABC
28FE02	U	007		-	D6	Ø7.5 WAS Ø8.0	XXXXX XXX	EFG	-	FGH
14MR02	U	009		-	E7	4.50 ADDED	XXXXX XXX	GHJ	-	HJK

DRAWING NUMBER						
17099999B						
SIZE	SCALE	FRAME NO	SHEET NO	STG	REV	N/P
A1	(1:1)	1 OF 1	3 OF	U	009	

10. The example on the next page illustrates possible REVISION and DRAWING NO. blocks for the drawing when changes to the part cause a change in the design level to level C. PART NO. 17099999C REV 011 is defined by a new and separate drawing composed of 3 sheets. These sheets are copies of 17099999B REV 010. The change to design level C has been authorized by the responsible design engineer and the customer. The revision record from design levels A and B has been retained. The revisions that define design level C are recorded as drawing revision 011. When design level D is authorized, a note is added in the REVISION BLOCK as shown in drawing revision 012 before the design level D copy is made.

DESIGN LEVEL IDENTIFIER

DWG STATUS					ZONE	REVISION HISTORY	AUTH	DR	APVD 1	APVD 2
DATE	STG	REV	N/P	CHG						
10JA02	U	001		-	-	DRAWING CREATED	XXXXX XXX	-	-	-
17JA02	U	002		-	E8	HOLE ADDED	XXXXX XXX	ABC	-	CDE
24JA02	U	003		-	-	SEE SH 3	XXXXX XXX	BCD	-	ABC
31JA02	U	004		A	-	SEE SH 2				
				B	C6	WAS 3 PLACES	XXXXX XXX	CDE	-	BCD
14FE02	U	005		-	D7	3.2 WAS 2.5	XXXXX XXX	CDE	-	DEF
21FE02	U	006		-	-	SEE SH 2	XXXXX XXX	BCD	-	ABC
28FE02	U	007		A	-	SEE SH 3				
				B	F5	12.0 ADDED	XXXXX XXX	EFG	-	FGH
14MR02	U	008		-	-	DES LVL ADV TO B	XXXXX XXX	GHJ	-	HJK
14MR02	U	009		A	C8	23.5 WAS 22.0				
				B	-	SEE SH 3	XXXXX XXX	GHJ	-	HJK
05AP02	U	010		-	-	DES LVL ADV TO C	XXXXX XXX	CDE	-	BCD
05AP02	U	011		A	-	SEE SH 2				
				B	B5	9.3 WAS 8.6	XXXXX XXX	CDE	-	BCD
20AP02	U	012		-		DES LVL ADV TO D	XXXXX XXX	BCD	-	ABC

DRAWING NUMBER						
17099999C						
SIZE	SCALE	FRAME NO	SHEET NO	STG	REV	N/P
A1	(1:1)	1 OF 1	1 OF 3	U	012	

DESIGN LEVEL IDENTIFIER

On sheets 2 and 3 of 17099999C:

DWG STATUS					ZONE	REVISION HISTORY	AUTH	DR	APVD 1	APVD 2
DATE	STG	REV	N/P	CHG						
10JA02	U	001		-	-	DRAWING CREATED	XXXXX XXX	-	-	-
31JA02	U	004		-	D6	6.7 WAS 7.5	XXXXX XXX	CDE	-	BCD
21FE02	U	006		-	E5	18.0 ADDED	XXXXX XXX	BCD	-	ABC
05AP02	U	011		-	A4	ADDED	XXXXX XXX	CDE	-	BCD

DRAWING NUMBER						
17099999C						
SIZE	SCALE	FRAME NO	SHEET NO	STG	REV	N/P
A1	(1:1)	1 OF 1	2 OF	U	011	

DWG STATUS					ZONE	REVISION HISTORY	AUTH	DR	APVD 1	APVD 2
DATE	STG	REV	N/P	CHG						
10JA02	U	001		-	-	DRAWING CREATED	XXXXX XXX	-	-	-
24JA02	U	003		-	F5	26.8 WAS 25.5	XXXXX XXX	BCD	-	ABC
28FE02	U	007		-	D6	Ø 7.5 WAS Ø 8.0	XXXXX XXX	EFG	-	FGH
14MR02	U	009		-	E7	4.50 ADDED	XXXXX XXX	GHJ	-	HJK

DRAWING NUMBER						
17099999C						
SIZE	SCALE	FRAME NO	SHEET NO	STG	REV	N/P
A1	(1:1)	1 OF 1	3 OF	U	009	

11. On the next page is shown an additional design level change, notation of engineering release, and scrolling of the REVISION BLOCK. Design changes have been made and design level D has been authorized. PART NO. 17099999D REV 013 is defined by a new and separate drawing composed of 3 sheets. These sheets are copies of 17099999C REV 012. The part is now at design level D, having been authorized by the responsible design engineer and the customer. The revision record from design levels A, B, and C has been retained. The revisions that caused the change to design level D are recorded as drawing revision 013. This change fills the REVISION BLOCK. Entries in the record are scrolled upward to provide enough space for the additional entries (see item B above). When Engineering Release is authorized, a note is added in the REVISION BLOCK as shown in drawing revision 014 before the ENGRG REL copy is made.

DESIGN LEVEL IDENTIFIER

DWG STATUS					ZONE	REVISION HISTORY	AUTH	DR	APVD 1	APVD 2
DATE	STG	REV	N/P	CHG						
10JA02	U	001		-	-	DRAWING CREATED	XXXXX XXX	-	-	-
17JA02	U	002		-	E8	HOLE ADDED	XXXXX XXX	ABC	-	CDE
24JA02	U	003		-	-	SEE SH 3	XXXXX XXX	BCD	-	ABC
31JA02	U	004		A	-	SEE SH 2				
				B	C6	WAS 3 PLACES	XXXXX XXX	CDE	-	BCD
14FE02	U	005		-	D7	3.2 WAS 2.5	XXXXX XXX	CDE	-	DEF
21FE02	U	006		-	-	SEE SH 2	XXXXX XXX	BCD	-	ABC
28FE02	U	007		A	-	SEE SH 3				
				B	F5	12.0 ADDED	XXXXX XXX	EFG	-	FGH
14MR02	U	008		-	-	DES LVL ADV TO B	XXXXX XXX	GHJ	-	HJK
14MR02	U	009		A	C8	23.5 WAS 22.0				
				B	-	SEE SH 3	XXXXX XXX	GHJ	-	HJK
05AP02	U	010		-	-	DES LVL ADV TO C	XXXXX XXX	CDE	-	BCD
05AP02	U	011		A	-	SEE SH 2				
				B	B5	9.3 WAS 8.6	XXXXX XXX	CDE	-	BCD
20AP02	U	012		-		DES LVL ADV TO D	XXXXX XXX	BCD	-	ABC
20AP02	U	013		A	D6	10.5 WAS 11.0				
				B	-	SEE SH 3				
				C	E5	5.50 WAS 5.25	XXXXX XXX	BCD	-	CDE
28AP02	U	014		-	-	REL TO PROD THRU REV 013 ON XXXXXXXXXX	-	ABC	-	DEF

Bottom of Revision Block

CN CREATION DATE

DRAWING NUMBER						
17099999D						
SIZE	SCALE	FRAME NO	SHEET NO	STG	REV	N/P
A1	(1:1)	1 OF 1	1 OF 3	U	014	

DESIGN LEVEL IDENTIFIER

If changes are included at the time of production release, the changes are recorded with the same revision symbol as the REL TO PROD recording, as shown below.

ON SHEET ONE

DWG STATUS					ZONE	REVISION HISTORY	AUTH	DR	APVD 1	APVD 2
DATE	STG	REV	N/P	CHG						
20AP02	U	001		-	-	DRAWING CREATED	XXXXX XXX	-	-	-
25MY02	U	002		A	B8	6.4 WAS 7.1				
				B	A11	ITEM 2 WAS 17086396	XXXXX XXX	BCD	-	ABC
19JL02	U	003		A	E10	3.8 WAS 3.5				
				B	-	SEE SH 4				
				C	-	REL TO PROD THRU REV 003 ON XXXXXXXXXX	-	CDE	-	DEF

ON SHEET 4 (OR ANY AFFECTED SUBSEQUENT SHEETS)

DWG STATUS					ZONE	REVISION HISTORY	AUTH	DR	APVD 1	APVD 2
DATE	STG	REV	N/P	CHG						
19JL02	U	003		-	H9	3.50 WAS 4.10	-	CDE	-	DEF

NOTE: If changes are included at the time of production release, and the changes <u>affect</u> <u>only</u> <u>the</u> <u>production</u> <u>drawing</u>, see example on page B–3.8.6.

DESIGN LEVEL IDENTIFIER

On sheets 2 and 3 of 17099999D:

DWG STATUS					ZONE	REVISION HISTORY	AUTH	DR	APVD 1	APVD 2
DATE	STG	REV	N/P	CHG						
10JA02	U	001		-	-	DRAWING CREATED	XXXXX XXX	-	-	-
31JA02	U	004		-	D6	6.7 WAS 7.5	XXXXX XXX	CDE	-	BCD
21FE02	U	006		-	E5	18.0 ADDED	XXXXX XXX	BCD	-	ABC
05AP02	U	011		-	A4	ADDED	XXXXX XXX	CDE	-	BCD

DRAWING NUMBER						
17099999D						
SIZE	SCALE	FRAME NO	SHEET NO	STG	REV	N/P
A1	(1:1)	1 OF 1	2 OF	U	011	

DWG STATUS					ZONE	REVISION HISTORY	AUTH	DR	APVD 1	APVD 2
DATE	STG	REV	N/P	CHG						
10JA02	U	001		-	-	DRAWING CREATED	XXXXX XXX	-	-	-
24JA02	U	003		-	F5	26.8 WAS 25.5	XXXXX XXX	BCD	-	ABC
28FE02	U	007		-	D6	Ø7.5 WAS Ø8.0	XXXXX XXX	EFG	-	FGH
14MR02	U	009		-	E7	4.50 ADDED	XXXXX XXX	GHJ	-	HJK
20AP02	U	013		-	F10	NOTE ADDED	XXXXX XXX	BCD	-	CDE

DRAWING NUMBER						
17099999D						
SIZE	SCALE	FRAME NO	SHEET NO	STG	REV	N/P
A1	(1:1)	1 OF 1	3 OF	U	013	

DESIGN LEVEL IDENTIFIER

12. The example below illustrates possible REVISION and DRAWING NO. blocks for a production part drawing. PART NO. 17099999 REV 014 is defined by a new and separate drawing composed of 3 sheets. These sheets are copies of 17099999D REV 014, the experimental part drawings at the released design level. All revision records from 17099999D REV 014 that will fit have been retained. The STG column will show the letter R beginning with the ENGRG REL entry. Revisions will be recorded on sheet one and subsequent sheets in the same way as on experimental drawings.

DWG STATUS					ZONE	REVISION HISTORY	AUTH	DR	APVD 1	APVD 2
DATE	STG	REV	N/P	CHG						
24JA02	U	003		-	-	SEE SH 3	XXXXX XXX	BCD	-	ABC
31JA02	U	004		A	-	SEE SH 2				
				B	C6	WAS 3 PLACES	XXXXX XXX	CDE	-	BCD
14FE02	U	005		-	D7	3.2 WAS 2.5	XXXXX XXX	CDE	-	DEF
21FE02	U	006		-	-	SEE SH 2	XXXXX XXX	BCD	-	ABC
28FE02	U	007		A	-	SEE SH 3				
				B	F5	12.0 ADDED	XXXXX XXX	EFG	-	FGH
14MR02	U	008		-	-	DES LVL ADV TO B	XXXXX XXX	GHJ	-	HJK
14MR02	U	009		A	C8	23.5 WAS 22.0				
				B	-	SEE SH 3	XXXXX XXX	GHJ	-	HJK
05AP02	U	010		-	-	DES LVL ADV TO C	XXXXX XXX	CDE	-	BCD
05AP02	U	011		A	-	SEE SH 2				
				B	B5	9.3 WAS 8.6	XXXXX XXX	CDE	-	BCD
20AP02	U	012		-		DES LVL ADV TO D	XXXXX XXX	BCD	-	ABC
20AP02	U	013		A	D6	10.5 WAS 11.0				
				B	-	SEE SH 3				
				C	E5	5.50 WAS 5.25	XXXXX XXX	BCD	-	CDE
28AP02	U	014		-	-	REL TO PROD THRU REV 013 ON XXXXXXXXXX	-	ABC	-	DEF
28AP02	R			-	-	ENGRG REL	XXXXX XXXXX	-	-	BCD

Bottom of Revision Block

CN CREATION DATE

DRAWING NUMBER 17099999						
SIZE	SCALE	FRAME NO	SHEET NO	STG	REV	N/P
A1	(1:1)	1 OF 1	1 OF 3	R	014	

DESIGN LEVEL IDENTIFIER

On sheets 2 and 3 of 17099999:

DWG STATUS					ZONE	REVISION HISTORY	AUTH	DR	APVD 1	APVD 2
DATE	STG	REV	N/P	CHG						
10JA02	U	001		-	-	DRAWING CREATED	XXXXX XXX	-	-	-
31JA02	U	004		-	D6	6.7 WAS 7.5	XXXXX XXX	CDE	-	BCD
21FE02	U	006		-	E5	18.0 ADDED	XXXXX XXX	BCD	-	ABC
05AP02	U	011		-	A4	ADDED	XXXXX XXX	CDE	-	BCD
28AP02	R			-		ENGRG REL	XXXXX XXXXX	-	-	BCD

DRAWING NUMBER						
17099999						
SIZE	SCALE	FRAME NO	SHEET NO	STG	REV	N/P
A1	(1:1)	1 OF 1	2 OF	R	011	

DWG STATUS					ZONE	REVISION HISTORY	AUTH	DR	APVD 1	APVD 2
DATE	STG	REV	N/P	CHG						
10JA02	U	001		-	-	DRAWING CREATED	XXXXX XXX	-	-	-
24JA02	U	003		-	F5	26.8 WAS 25.5	XXXXX XXX	BCD	-	ABC
28FE02	U	007		-	D6	Ø7.5 WAS Ø8.0	XXXXX XXX	EFG	-	FGH
14MR02	U	009		-	E7	4.50 ADDED	XXXXX XXX	GHJ	-	HJK
20AP02	U	013		-	F10	NOTE ADDED	XXXXX XXX	BCD	-	CDE
28AP02	R			-		ENGRG REL	XXXXX XXXXX	-	-	BCD

DRAWING NUMBER						
17099999						
SIZE	SCALE	FRAME NO	SHEET NO	STG	REV	N/P
A1	(1:1)	1 OF 1	3 OF	R	013	

DESIGN LEVEL IDENTIFIER

E. Revision Records, Chart Drawing

1. The procedure for recording revisions on chart drawings is the same as that for multi-sheet drawings except as follows:

   a. When a new design level is authorized due to affect on interchangeability (fit, form, function, or performance), a new number is added to the chart. Example: 17099994B on chart RP999999 REV 009, below. No additional notation about the design level being advanced is recorded in the revision column. If the new SPN will be added to a different chart, or become a separate drawing, the appropriate recording is used as shown in the example: RP999999, REV 014 and REV 015.

   b. When a number is released to production, a revision is made on sheet one of the chart, “see sheet 4”. On sheet 4 the recording is made to show the number being released and on what CN. Example: RP999999, REV 013.

2. If a part number is released to production as a separate drawing, a single recording is made on the new production drawing: REL FROM CHART _____. This will precede the ENGRG REL notation in the revision column.

3. Chart Released to Production

   a. When an entire <u>single sheet</u> chart and all the SPN’s on it are released, a single recording is made on the RP chart.

      example: 17102949A, 950A, 951A
      REL TO PROD AND CHART RELEASED
      AS 17088227 THRU REV 003
      ON XXXXXXXXXX

   b. When an entire <u>multi-sheet</u> chart and all the SPN’s on it are released, recordings are made on the RP chart as shown in the example that follows: RP999999, REV 004.

DESIGN LEVEL IDENTIFIER

DWG STATUS					ZONE	REVISION HISTORY	AUTH	DR	APVD 1	APVD 2
DATE	STG	REV	N/P	CHG						
04JA02	U	001		-	-	DRAWING CREATED	XXXXX XXX	-	-	-
08JA02	U	002		-	-	SEE SHEET 4	XXXXX XXX	BCD	-	CDE
15JA02	U	003		-	-	SEE SHEETS 2 AND 4	XXXXX XXX	DEF	-	EFG
19JA02	U	004		A	-	CHART REL TO PROD AS 17088227 THRU REV 003 ON XXXXXXXXXX				
				B	-	SEE SHEET 4	XXXXX XXX	FGH	-	GHJ
24JA02	U	005		A	-	WAS SHEET 1 OF 3				
				B	-	SEE SHEETS 3 AND 4	XXXXX XXX	HJK	-	JKL
27JA02	U	006		-	-	SEE SHEETS 3 AND 4	XXXXX XXX	KLM	-	LMN
03FE02	U	007		-	-	SEE SHEET 4	XXXXX XXX	MNP	-	NPR
09FE02	U	008		-	-	SEE SHEET 3	XXXXX XXX	PRS	-	RST
17FE02	U	009		-	-	SEE SHEET 4	XXXXX XXX	STV	-	TVW
22FE02	U	010		-	-	SEE SHEET 2	XXXXX XXX	VWX	-	WXY
27FE02	U	011		-	-	SEE SHEETS 3 AND 4	XXXXX XXX	XYZ	-	ABC
04MR02	U	012		-	B8	26.0 WAS 25.9	XXXXX XXX	BCD	-	CDE
12MR02	U	013		-	-	SEE SHEET 4	XXXXX XXX	DEF	-	EFG
16MR02	U	014		-	-	SEE SHEET 4	XXXXX XXX	FGH	-	GHJ
21MR02	U	015		-	-	SEE SHEET 4	XXXXX XXX	HJK	-	JKL

DRAWING NUMBER						
RP999999						
SIZE	SCALE	FRAME NO	SHEET NO	STG	REV	N/P
A1	(1:1)	1 OF 1	1 OF 4	U	015	

DESIGN LEVEL IDENTIFIER

DWG STATUS					ZONE	REVISION HISTORY	AUTH	DR	APVD 1	APVD 2
DATE	STG	REV	N/P	CHG						
04JA02	U	001		-	-	DRAWING CREATED	XXXXX XXX	-	-	-
15JA02	U	003		-	H10	DIM B WAS 4.5	XXXXX XXX	DEF	-	EFG
22FE02	U	010		-	E7	3.2 WAS 3.1	XXXXX XXX	VWX	-	WXY

DRAWING NUMBER						
RP999999						
SIZE	SCALE	FRAME NO	SHEET NO	STG	REV	N/P
A1	(1:1)	1 OF 1	2 OF	U	010	

DWG STATUS					ZONE	REVISION HISTORY	AUTH	DR	APVD 1	APVD 2
DATE	STG	REV	N/P	CHG						
04JA02	U	001		-	-	DRAWING CREATED	XXXXX XXX	-	-	-
24JA02	U	005		-	-	FIG. 1 ADDED	XXXXX XXX	HJK	-	JKL
27JA02	U	006		-	-	FIG. 2 ADDED	XXXXX XXX	KLM	-	LMN
09FE02	U	008		-	F6	0.5 WAS 0.8	XXXXX XXX	PRS	-	RST
27FE02	U	011		-	-	FIG. 3 ADDED	XXXXX XXX	XYZ	-	ABC

DRAWING NUMBER						
RP999999						
SIZE	SCALE	FRAME NO	SHEET NO	STG	REV	N/P
A1	(1:1)	1 OF 1	3 OF	U	011	

DESIGN LEVEL IDENTIFIER

	PART NUMBER	17099993A	17099994A	17099995A	17099996A	17099994B	
	STATUS	RELEASED	RELEASED	-	RELEASED	-	
1	USE FIGURES	-	-	1,3	2	-	
2	A SHEET 1	1.3	1.5	-	-	1.7	
3	B SHEET 2	4.5	4.5	2.5	2.0	2.0	
4	C SHEET 1	7.1	7.3	-	-	-	
5							
6							
7							
8							
9							
10							

DWG STATUS					ZONE	REVISION HISTORY	AUTH	DR	APVD 1	APVD 2
DATE	STG	REV	N/P	CHG						
04JA02	U	001		-	-	DRAWING CREATED	XXXXX XXX	-	-	-
08JA02	U	002		-	-	17099994A LINE 2 1.5 WAS 1.7	XXXXX XXX	BCD	-	CDE
15JA02	U	003		-	-	17099994A LINE 3 ADDED	XXXXX XXX	DEF	-	EFG
19JA02	U	004		-	-	17099993A AND 17099994A REL TO PROD ON XXXXXXXXXX	XXXXX XXX	FGH	-	GHJ
24JA02	U	005		A	-	WAS SHEET 3				
				B	-	17099995A ADDED	XXXXX XXX	HJK	-	JKL
27JA02	U	006		-	-	17099996A ADDED	XXXXX XXX	KLM	-	LMN
03FE02	U	007		-	-	17099995A LINE 4 DASH (-) WAS 7.1	XXXXX XXX	MNP	-	NPR
17FE02	U	009		-	-	17099994B ADDED	XXXXX XXX	STV	-	TVW
27FE02	U	011		-	-	17099995A LINE 1 FIG. 3 ADDED	XXXXX XXX	XYZ	-	ABC
12MR02	U	013		-	-	17099996A REL TO PROD ON XXXXXXXXXX	XXXXX XXX	DEF	-	EFG
16MR02	U	014		-	-	17099995A DES LVL ADV TO B SEE CHART RP999998	XXXXX XXX	FGH	-	GHJ
21MR02	U	015		-	-	17099994B DES LVL ADV TO C SEE 17099994C	XXXXX XXX	HJK	-	JKL

DRAWING NUMBER						
RP999999						
SIZE	SCALE	FRAME NO	SHEET NO	STG	REV	N/P
A1	(1:1)	1 OF 1	4 OF	U	015	

DESIGN LEVEL IDENTIFIER

F. Production Release of Earlier Design Level

1. If the responsible design engineer and the customer decide that an earlier design level should be production released, the steps given below are to be followed.

2. Production release for the desired design level drawing is done as shown in paragraphs C.6 and C.7 above (or D.11 and D.12 for multi-sheet drawings).

3. A recording is made with the next revision symbol on the current (most advanced) design level drawing:
   DES LVL X REL TO PROD ON XXXXXXXXXX. The CN number is also shown in the AUTHORITY column and the CN creation date is entered in the DATE column.

G. When an earlier design level was represented by a hand marked drawing only, it will be recorded on sheet one as shown below (design level A). All subsequent design levels will be represented by engineering drawings.

DWG STATUS					ZONE	REVISION HISTORY	AUTH	DR	APVD 1	APVD 2
DATE	STG	REV	N/P	CHG						
-	U	-		-	-	REPRESENTED BY HAND MARKED DWG ONLY	-	-	-	-
23AP02	U	001		-	-	DRAWING CREATED	XXXXX XXX	-	-	-

DRAWING NUMBER						
17099998B						
SIZE	SCALE	FRAME NO	SHEET NO	STG	REV	N/P
A2	(1:1)	1 OF 1	1 OF 1	U	001	

DESIGN LEVEL IDENTIFIER

H. Shown below is the initial recording on all sheets of a drawing when there had been no drawing of any kind for the part number before.

DWG STATUS					ZONE	REVISION HISTORY	AUTH	DR	APVD 1	APVD 2
DATE	STG	REV	N/P	CHG						
23AP02	U	001		-	-	DRAWING CREATED FORMERLY NO DRAWING FOR PART	XXXXX XXX	-	-	-

PRODUCT OUTLINE DRAWINGS

In making a product outline drawing the following rules should be observed, unless otherwise specified by customer requirements.

A. The product description must appear in the title block.

B. When the outline is also used as an assembly all major assemblies and loose parts must be identified.

C. Dimensioning

1. All dimensions that appear on the drawing are to be either calculated or taken from the detail part print. These dimensions may vary between customers.

2. All dimensions for customer hook-up points and general size of the product for packaging and clearance information should be shown.

3. Where possible, group dimensions for customer hook-up points in no more than two views.

4. Throttle lever studs and/or holes and any other features must include all customer hook-up point dimensions, including tolerances where necessary. The throttle shaft to bore offset, throttle valve angle, and lever travel (closed to open position) must also be shown, but without tolerance.

5. When dimensions appearing on the drawings are for reference only they should be rounded off as follows:

   a. On inch dimensions - round off to a two place decimal.

   b. On metric dimensions - round off to a one place decimal.

6. Any part(s) dimensioned on a drawing must be dimensioned in the same units of measure as the detail part(s).

PRODUCT OUTLINE DRAWINGS

D. Standard notes for product outline drawings where applicable.

1. The general tolerance note should be edited to show blanks and the following general note should be added.

   UNLESS TOLERANCE IS INDICATED, ALL DIMENSIONS ARE FOR REFERENCE ONLY.

2. Where applicable, the following notes should be added to their respective connections.

   a. Tube connections.

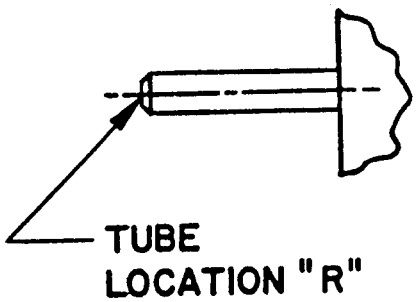

   b. Fuel inlet connections.

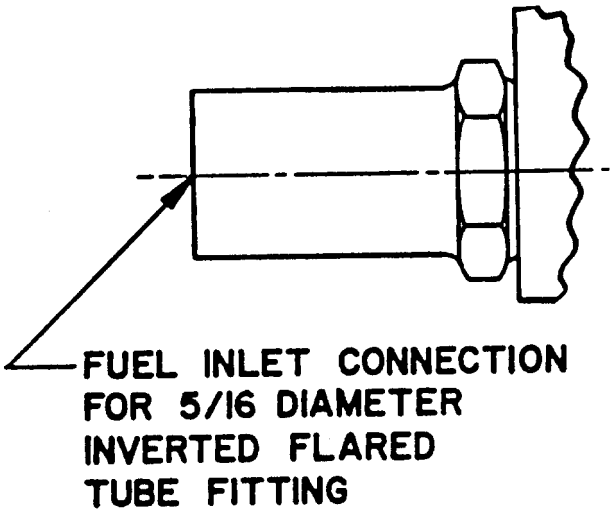

3. As applicable, any notes required for validation may be shown, e.g. Service Requirements, drawing number for applicable Test Specification(s).

PRODUCT OUTLINE DRAWINGS

E. Single drawing number for both the outline and assembly drawings

1. For products currently drawn with separate numbers, the outline drawing number will be retained and the assembly number obsoleted when the drawings are redrawn to make the assembly drawing part of the combined drawing.

2. Sheet one, or the first multiple sheet set, of the combined drawing will always be the customer outline drawing and named accordingly; e.g. DAHVL - OUTLINE. This is referred to as the outline segment of the combined drawing.

3. Sheet 2, or the second multiple sheet set, will always be the assembly drawing and named accordingly; e.g. DAHVL ASM. This is referred to as the assembly segment of the combined drawing.

4. The outline segment and the assembly segment will each have a separate set of revision symbols, a separate numerical series. The first sheet of the assembly drawing segment will have a recording made in the revision block for all changes to any sheet (if any outline sheets are affected, the recording will be only: SEE SH ONE). This sheet will always maintain the highest revision number. The outline segment will reflect only changes made to the outline sheet(s).

5. Notes within the body of the drawing will assist the Records Department (ETDM) and others in knowing which sheets the customer will receive and which are restricted. The notes will be in 10 mm MDCFONT in Unigraphics or GM Micro font in UGMX.

OUTLINE SHEETS.....	CUSTOMER OUTLINE DWG
ASSEMBLY SHEETS.....	DELPHI RESTRICTED ASSEMBLY DWG

6. Sheet Numbering

   a. One outline and one assembly sheet
      Outline segment: SHEET 1
      Assembly segment: SHEET 2 OF 2

   b. Multiple sheet segments
      Outline segment: SHEET 1
      SHEET 2
      Assembly segment: SHEET 3 OF 4
      SHEET 4 OF 4

PRODUCT OUTLINE DRAWINGS

7. In GES, the latest revision will be that of the outline drawing (sheet one).

F. Saturn Corporation

Every sheet of an outline drawing for Saturn shall carry the latest revision symbol. The revision recording on subsequent sheets that are not affected by the latest change will be : SEE SHEET ONE.

GEOMETRIC DIMENSIONING AND TOLERANCING

1. Geometric dimensioning and tolerancing does not replace the coordinate dimensioning system, but is the preferred method. Geometric callouts must be interpreted per appropriate national and corporate standards, this Standard, or other approved standards referred to on the drawing, only.

2. Features of size should be located at MMC, to take advantage of functional gaging and bonus tolerances. Exception: On die casting drawings only, geometric dimensioning with MMC bonus tolerances should be avoided. Geometric dimensioning RFS should be used where applicable.

3. If a feature control frame is shown with a duplicate dimension, it must be repeated wherever the duplicate dimension is shown.

4. Interrelationships of datums should be specified rather than implied.

5. On geometrically dimensioned drawings, the datum identification symbol should be used only for datum references. When a feature or surface must be identified for other reasons, the appropriate letter is shown as described on page B-2.3.1.

6. When a finish drawing uses a cast feature as a datum, the dimensions for that feature must not be repeated on the finish drawing, but the following note must be added.

GAGING
FORMER PRACTICE

A. Separate gaging should be indicated where possible, but to meet the functional requirements for some coaxial holes and hole patterns, simultaneous gaging may be required.

1. If the number of holes and/or places appear above the feature control symbol, simultaneous gaging is indicated.

2. If the number of holes and/or places appear below the feature control symbol, separate gaging is indicated.

B. The following examples show several methods that may be used on drawings to indicate that separate gaging is permissible.

1. The feature shown in this example may be gaged separately, according to the general note on RP formats that states: "Separate true position callouts may be gaged separately."

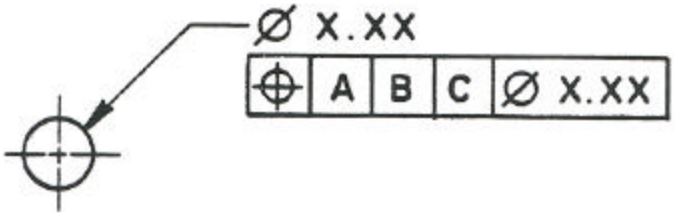

2. The quantity of features when shown below the true position callout indicates that separate gaging is permissible.

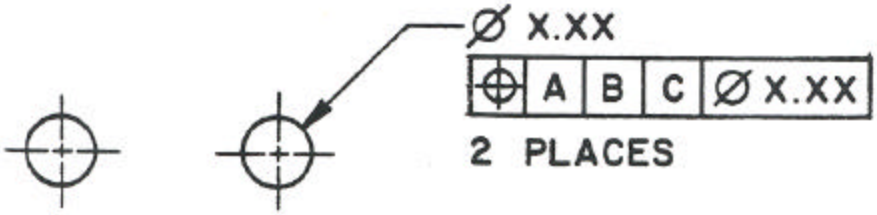

GAGING
FORMER PRACTICE

B. 3. When two or more coaxial features are called out in compound note form, separate gaging may be indicated by using a separate callout for each feature.

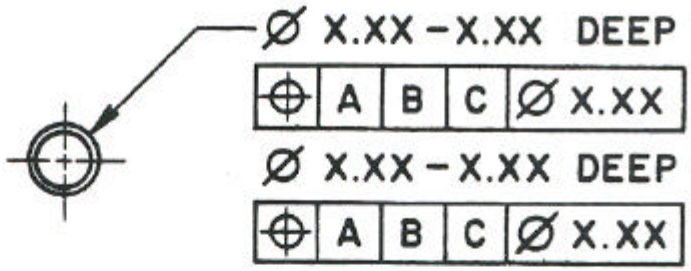

C. The following examples show several methods that may be used on drawings to indicate that simultaneous gaging is required.

1. The quantity of features such as "2 places" when shown directly above the true position callout constitutes a pattern and indicates a simultaneous gaging requirement.

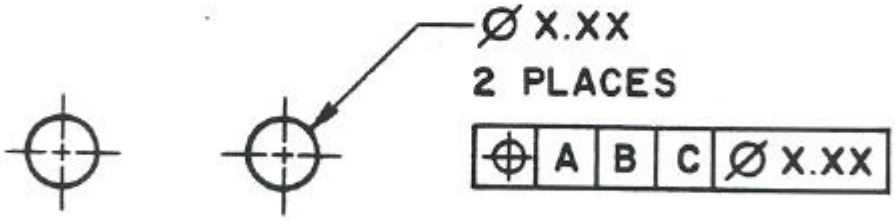

2. When two or more coaxial features are called out in compound note form, simultaneous gaging may be indicated by describing the quantity of features directly over the true position callout.

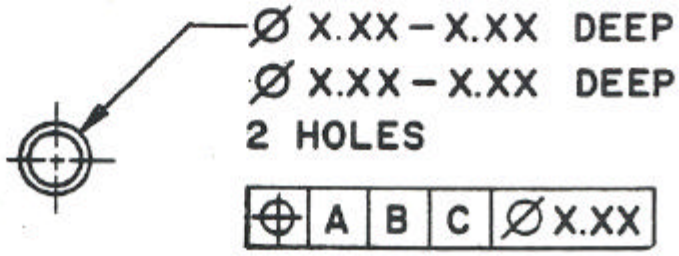

GAGING
FORMER PRACTICE

C. 3. When a pattern of holes, consisting of two or more coaxial features are called out in compound note form, simultaneous gaging may be indicated as shown below.

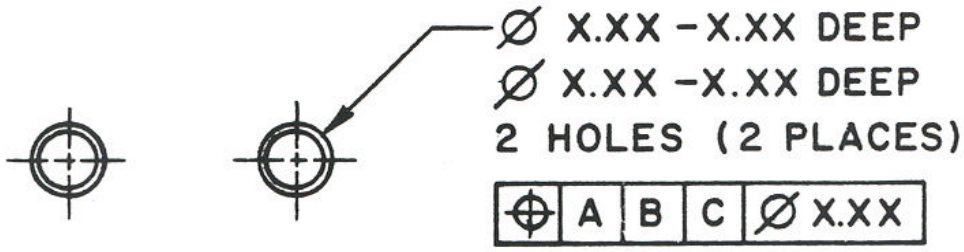

4. This description indicates that the pattern of 2 holes and the counterbores must all be gaged simultaneously.

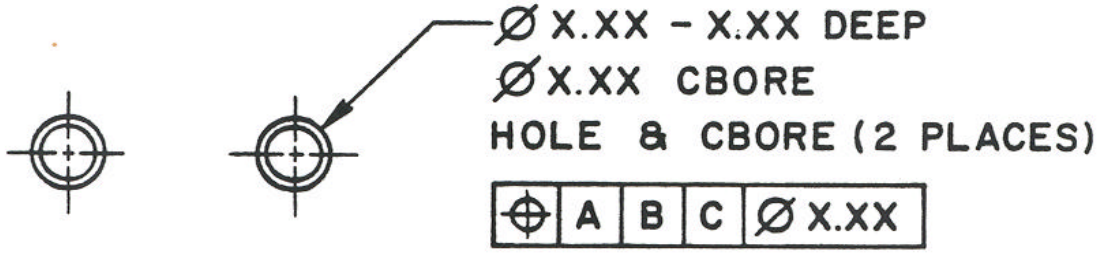

5. This method may also be used to indicate simultaneous gaging.

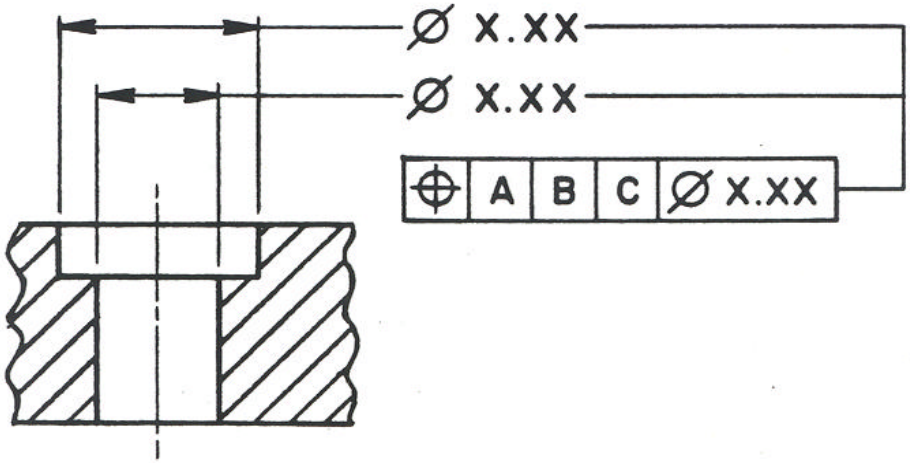

GAGING
FORMER PRACTICE

D. The following examples may be used when simultaneous and separate gaging must be used in conjunction with each other.

1. This method illustrates a requirement where the hole and counterbore must be gaged simultaneously and the pattern of holes may be gaged separately.

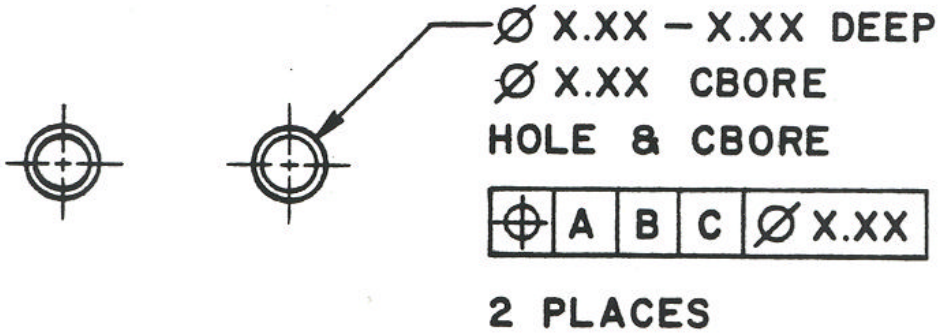

2. This method illustrates a requirement where the hole and counterbore may be gaged separately but the pattern of holes must be gaged simultaneously.

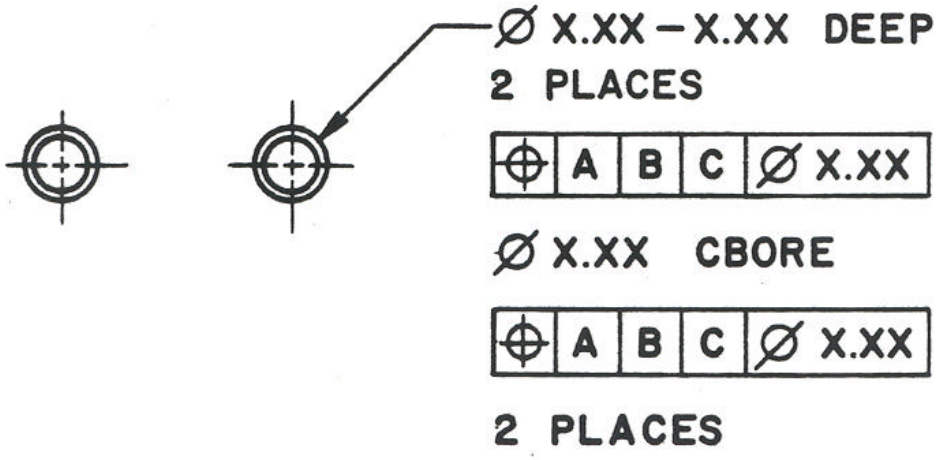

When printed, this document is uncontrolled.

CHARTS - GENERAL

A. A chart is a composite tabulated drawing of similar parts or assemblies, with all differences except component part numbers listed on grid sheets for easy reference (Experimental chart grid sheets also include part number differences). Product structures and detail drawings provide the actual definition of components. On customer outline drawings the pictorial representation of piece parts and sub-assemblies will be correct in appearance.

B. The advantages of a chart are:

1. less drawing time
2. standardization
3. easy reference for a new design

C. Charts consist of the following:

1. main sheets
2. figure sheets
3. grid sheets

D. Information pertaining to all sheets of a chart.

1. The drawing date and predominant drawing scale must be the same on all sheets of a chart.

2. The drafter's and approvers' signatures may vary on different sheets.

3. In redrawing a sheet of a chart the date must be carried over, but all new signatures must be obtained.

4. When adding a new grid sheet to the end of a chart the following procedure must be used:

   a. Sheet number one must be revised to show the total number of sheets.

   b. The new sheets must carry the original title block information for the chart.

5. When adding a main or figure sheet to the middle of a chart, the following procedure must be used.

   a. Sheet number one must be revised to show the new total number of sheets.

   b. The new sheet must carry the original title block information for the chart.

CHARTS - GENERAL

c. The first revision symbol of the sheet being added must be the next revision symbol of the drawing and should say REVISED AND REDRAWN. (e.g. grid sheet #3 revision “11” becomes new figure sheet #3 with revision “14”).

d. The last sheet of the chart will be treated like a new sheet and will use the next revision symbol of the drawing with the recording, WAS SHEET 3 (per e.g. above).

e. All other sheets will be revised to show the correct sheet number and will use the next revision symbol for that drawing.

6. On all chart drawings:

The word CHART must appear as the first word in the name on the drawing.

Also, when taking out a part number, make sure that the word CHART is the first word in the name.

EXAMPLE

NAME
CHART - LEVER

When printed, this document is uncontrolled.

CHARTS- MAIN SHEETS

A. The main sheet must contain only information applicable to all parts on the chart.

B. Sections may be cut on the main sheet where the section views appear in figures. When this is done, the following note must be added to sheet number one.

SECTIONS NOT SHOWN ON THE MAIN SHEETS ARE LOCATED ON THE FIGURE SHEETS. FOR THE APPROPRIATE FIGURE, REFER TO THE GRID SHEETS.

C. Variable part names on assembly drawings will be 3.5 mm (formerly 4) high text.

D. The following items are shown on sheet one only: EMI, material, process spec, and general tolerance.

E. General notes in the lower right hand corner of sheet one will be 3.5 mm (formerly 4) high text.

F. Variable letters will be 10 mm (formerly 9.5) high.

CHARTS - FIGURE SHEETS

A. Figures contain information (which cannot easily be shown with variables) not applicable to all the parts on the chart.

B. Where a section is shown, the angle of the section, shown in the main view, must be maintained in the figure.

C. The lettering in the figures should be consistent with the lettering shown on the main sheets.

D. The size of a figure is determined by the amount of information required.

E. The designation of the figure will be lettered in the lower left hand corner of the figure as shown below.

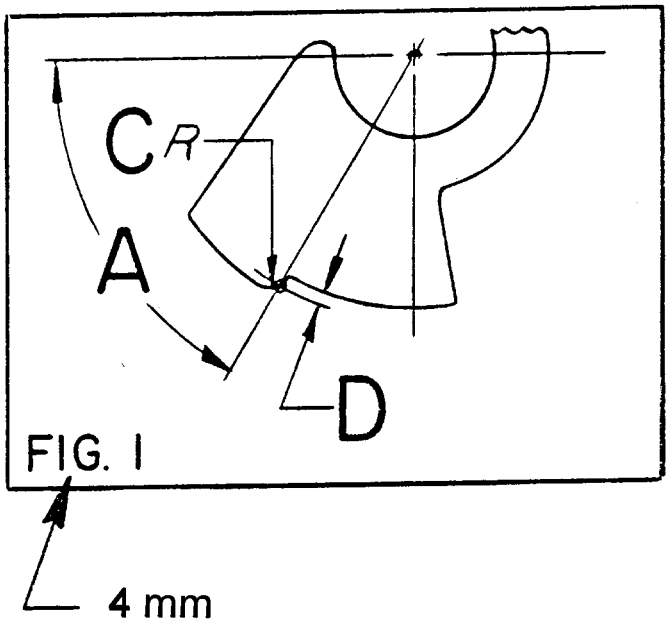

CHARTS - GRID SHEETS

A. Part numbers must be listed in a numerical sequence on all chart drawings.

B. The names used as variables should be identical to the names shown on the main or figure sheets.

C. Obsolete part numbers should not be included when making new charts. When redrawing an entire chart, obsolete part numbers may be excluded (at the discretion of the appropriate design supervisor) if the part is no longer being manufactured.

D. The general tolerance block must be omitted on any grid sheet format.

E. If a variable dimension has a tolerance other than the general tolerance shown in the format tolerance block, and that tolerance is the same for all charted parts, the variable dimension should be entered as a mean dimension in the variable column on the grid sheet and the tolerance shown as an equilateral tolerance after the letter which identifies the variable on the main or figure sheets.

Examples: Inch drawings: A ± .025 B ± .60
Metric drawings: A ± 0.20 B ± 0.2

F. If the tolerance of a variable is different from one part to another, the dimension and tolerance should be entered in the variable column on the grid sheet as a mean dimension with an equilateral tolerance.

Examples: Inch drawings: .036 ± .016; 1.64 ± .03; .0330 ± .0005
Metric drawings: 32.42 ± 0.20; 11.0 ± 0.5; 16.1000 ± 0.0005

G. On casting drawings the following note (where applicable) may be added above the title block.

THE FOLLOWING FIGURES ARE OPTIONAL ON ALL CASTINGS WHERE THEY ARE NOT REQUIRED AS A PERMANENT FEATURE
- OPTIONAL FIGURES -
(7,9,11,14)

H. Grids are prepared with the part numbers horizontally across the top with the variables listed vertically on the left hand side (see page 6.4.1).

I. The word **one** is used when it is the only figure number called out.
The numeral **1** is used when it is listed with other figures.

When printed, this document is uncontrolled.

CHARTS - GRID SHEETS

Lettering sizes, line spacing, and line weights.

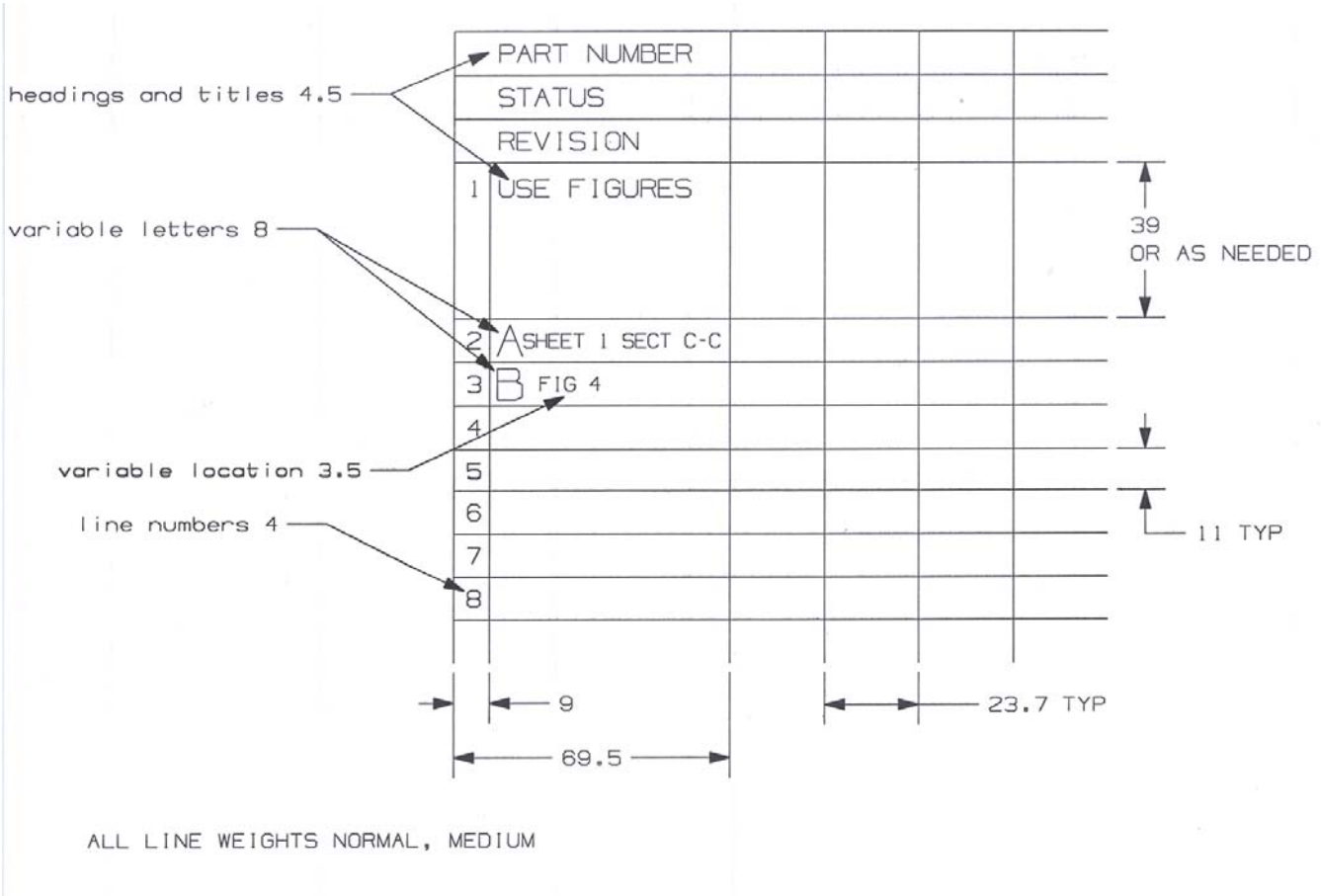

EXPERIMENTAL LAYOUTS

A. Stack-ups to check fits and clearance must show dimensions as illustrated in the following.

1. Minimum tolerance 9.5 - 0.1

2. Maximum tolerance 9.5 + 0.1

3. Split tolerance 9.8 ← (to dimension used)
   9.4

4. Angle tolerance 15° + 1° or 15° - 1°

B. All parts shown on layouts must have the part number and latest revision symbol indicated. If the part number appears on a chart drawing, all pertinent sheets must also be defined (7045678 REV 5 sheets 1 and 4, etc.).

When printed, this document is uncontrolled.

PROCESS LEVEL SUFFIX (PLS)

A. General
The addition or advancement of a Process Level Suffix will be recorded in the revision history on drawings, and it may be included in the drawing number.

B. NX
The PLS should not be included in the NX file name of 3D master math design files. The PLS may be included in the NX file name of drawing files, but only if concurrent process level drawings are required.

DEVELOPMENT and PROTOTYPE STAGE PARTS

A. See the section in this Standard about Recording Drawing Revisions, which begins on page B-3.2, for approved revision record entries when a part is promoted to Development or Prototype stage.

B. Charted parts will be added to production released charts with the appropriate notation, DEVELOPMENT or PROTOTYPE, placed on the STATUS line.

C. NX File Naming (native NX)

1. For Development stage: *VL* suffix in first field of file name, similar to a design level identifier.

2. For Prototype stage: *TY* suffix in first field of file name, similar to a design level identifier.

ZERO LINE DIMENSIONING

1. Zero line dimensioning may be used on drawings where numerous dimensions must be shown as originating from a common base line. This system conserves space and results in an easier to read drawing. Dimensions from the common base line are shown on extension lines without the use of dimension lines or arrowheads. It is especially applicable for use with geometric tolerancing, but may also be used with coordinate dimensions (see examples below).

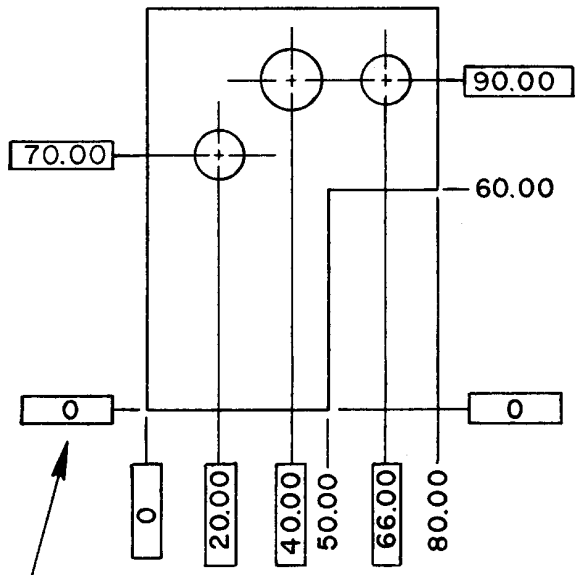

The Zero dimension should be enclosed in a box as shown when used on drawings with geometric dimensioning.

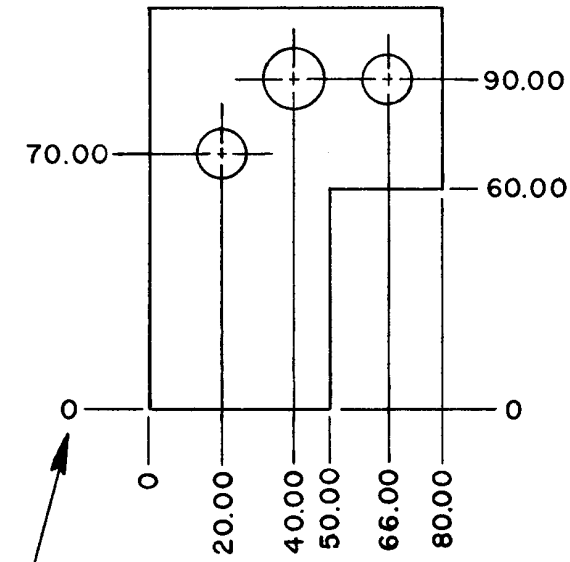

If no geometric dimensions are used on the drawing, the Zero should be as shown.

2. In any view that uses zero line dimensioning, the zero lines must be shown, but, they may be located out of scale (only if the originating point is not in the view).

When printed, this document is uncontrolled.

ZERO LINE DIMENSIONING

3. On drawings using geometric tolerancing, the Zero dimension is not to be considered a datum identification symbol. The datum features or surfaces must be properly identified to establish the datum framework referred to in the feature control symbol block (see ex. below).

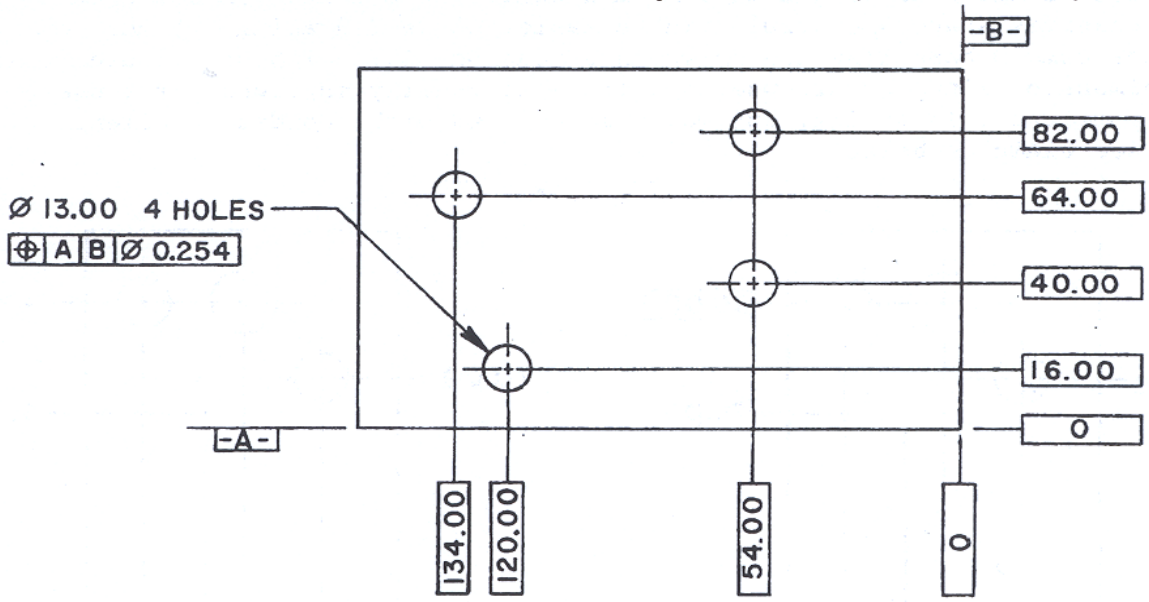

4. All dimensions originating from the Zero Line should be in a single column. Two columns may be used, but should be avoided if possible. Notes and other dimensions should not be placed in line with these dimensions (see example below).

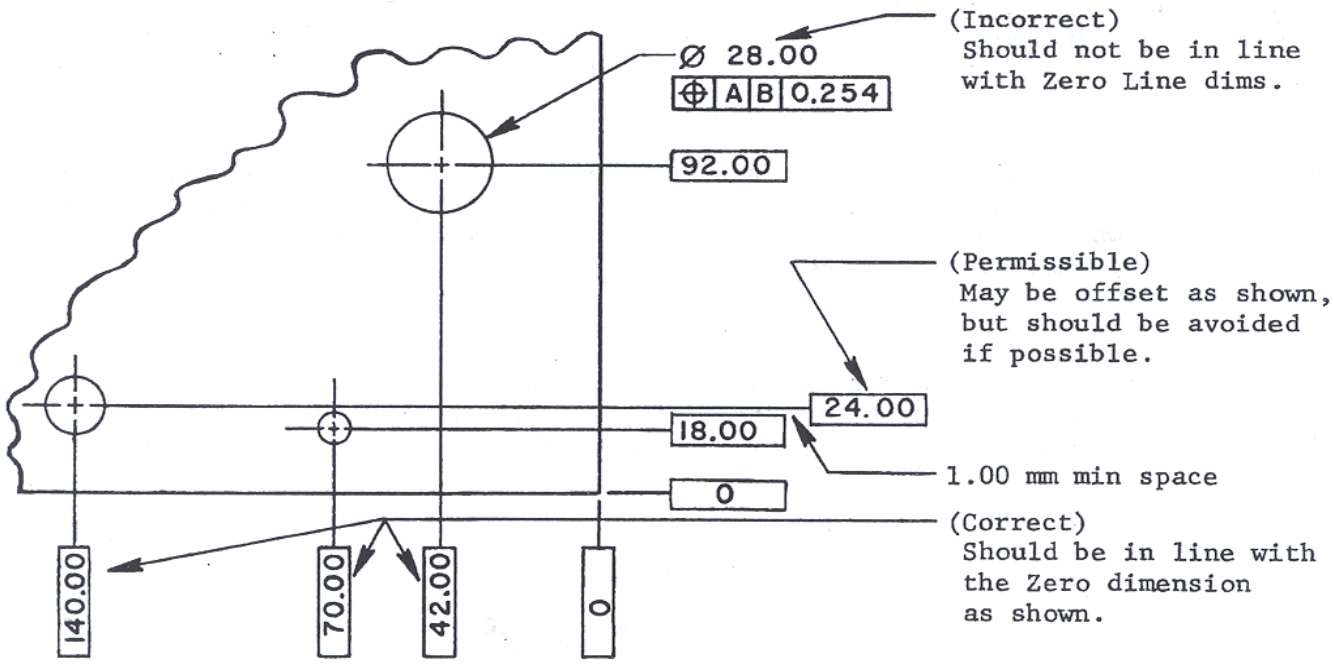

ZERO LINE DIMENSIONING

5. All dimensions originating from the Zero Line should read as shown in example below. Space considerations make it impractical to have all dimensions read from the bottom of the drawing.

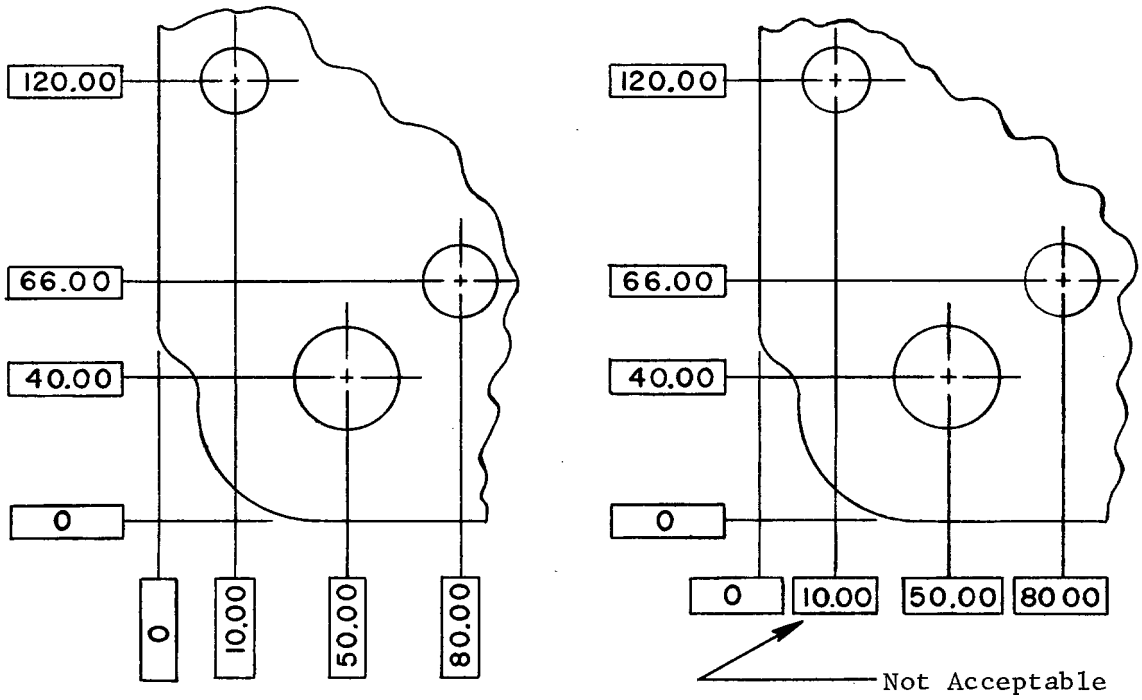

6. Where non-basic dimensions are shown 4.00 mm min space must be allowed between dimensions. Where basic dimensions are used, 1.00 mm min space must be allowed. (see examples below)

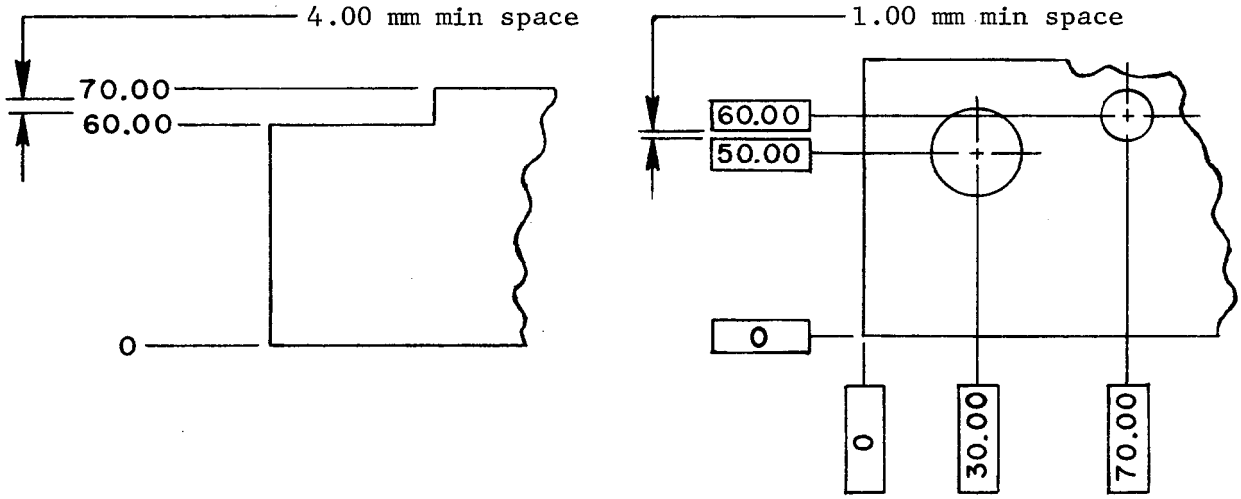

ZERO LINE DIMENSIONING

7. a. Where a non-basic dimension is shown, the dimension must be approximately centered on the dimension line.

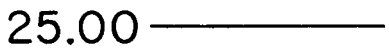

Acceptable
(should be centered)

Not Acceptable

b. Where a basic dimension is shown, the dimension should be approximately centered on the dimension line. In extreme cases where space is limited, the basic block may be offset.

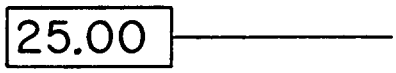

Acceptable
(should be centered)

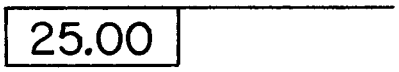

Acceptable
(should be avoided if possible)

If it is necessary to offset two basic dimensions, a min space of 1.50 mm must be maintained between dimension lines.

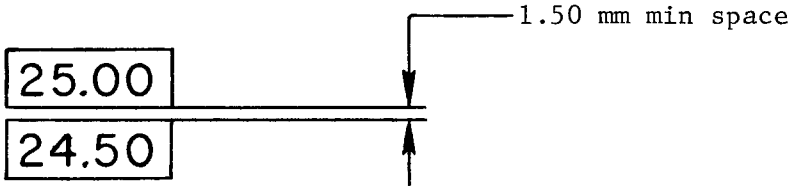

Acceptable (use only when absolutely necessary)

8. The extension line must not be bent.

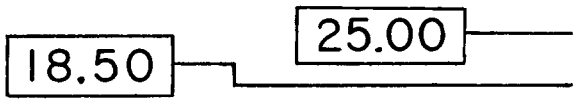

Not Acceptable

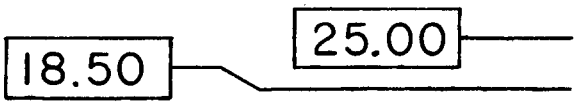

Not Acceptable

9. The blocks used for enclosing the basic dimensions that originate at the Zero Line are to be uniform in length (see Geometric Dimensioning Section D).

When printed, this document is uncontrolled.

DIMENSIONING

A. Bead dimensions on casting drawings.

Unless otherwise specified, the following rules apply to all casting drawings where beads are shown.

1. A typical section through a bead should be shown.

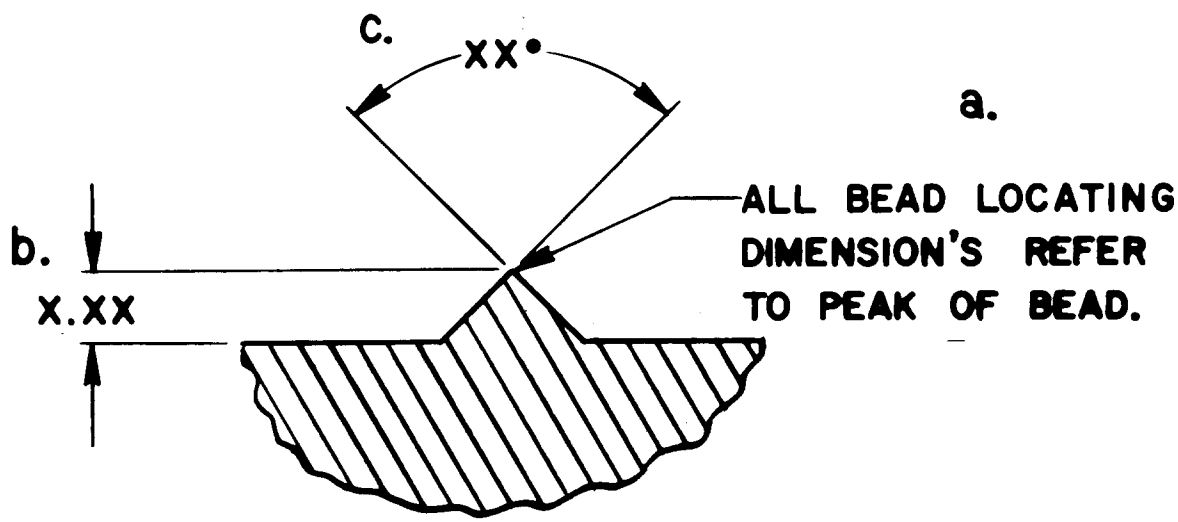

ENLARGED TYPICAL SECTION THRU BEAD

a. A note should be shown in this section stating that all bead locating dimensions refer to the peak of the bead.

b. The height dimension should be clearly shown to the point of the bead. (See Casting section in section A for values.)

c. The included angle should be shown. (See Casting section in section A for the proper angle.)

DIMENSIONING

2. It is recommended that a separate view be provided to show the bead locating dimensions if possible.

   a. Whether or not a separate view is provided, each dimension that is used for defining a bead should be followed by the word "bead" or the letter "B" at the discretion of the drafting leader.

   b. A bead location should be defined with a single locating dimension from the edge of a feature rather than as a diameter or a radius located with coordinate dimensions.

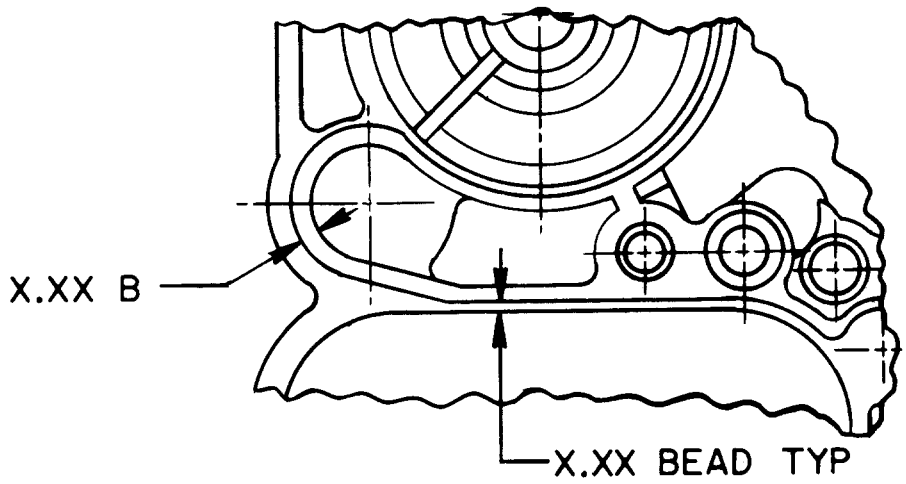

B. Dimensioning machined holes

Whenever a cored hole (or drill spot) in a casting is machined (reamed, drilled, tapped, etc.) the locating dimensions, of the hole, must be repeated on the finish drawing.

DIMENSIONING

C. On all flat fast idle cams, attached with a shouldered screw, the following notations must be added.

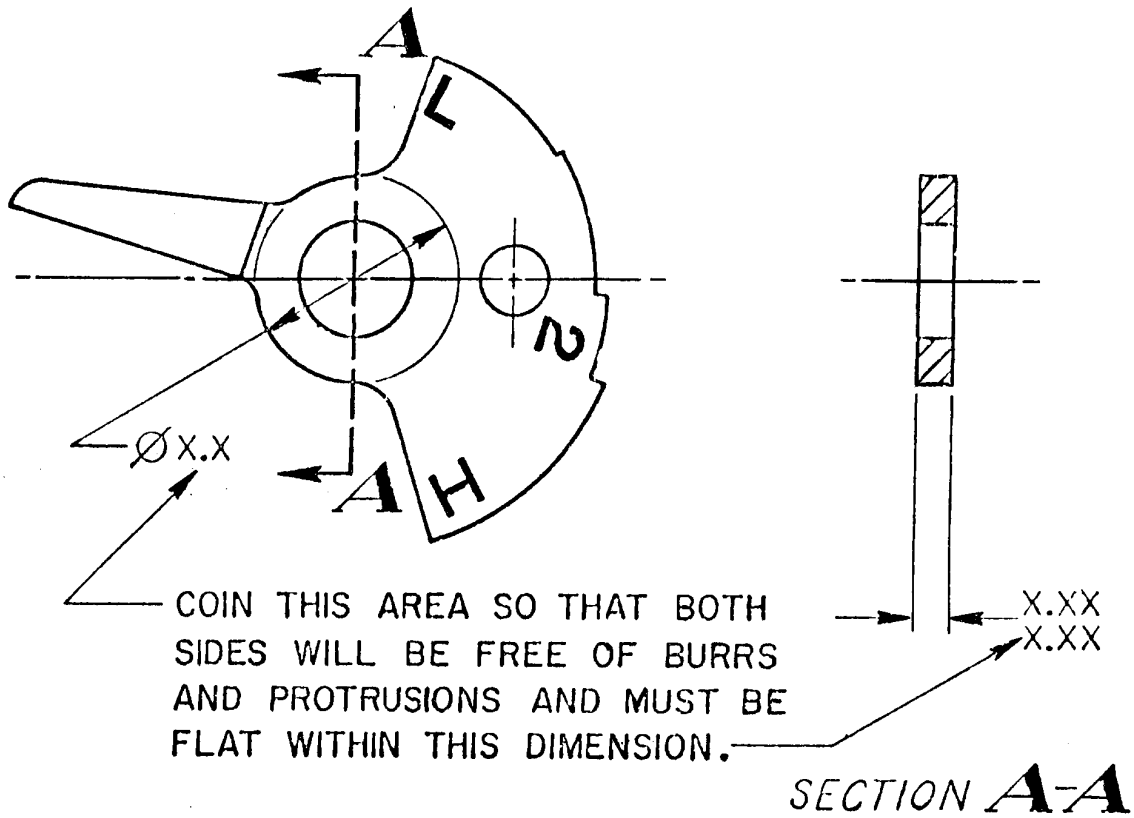

D. All tolerances not implied by the format tolerance block should be expressed as a mean dimension with equilateral tolerance immediately following.

Examples: Inch drawings .036 ± .016, 1.64 ± .03, .0330 ± .0005.

Metric drawings 32.42 ± 0.20, 11.0 ± 0.5, 16.1000 ± 0.0005.

DIMENSIONING

E. Reference dimension view on lever drawings.

1. All lever drawings should be dimensioned with coordinate dimensions to each hole.

2. A view should be shown in the upper right or left hand corner of the drawing showing the radial and angular reference dimensions.

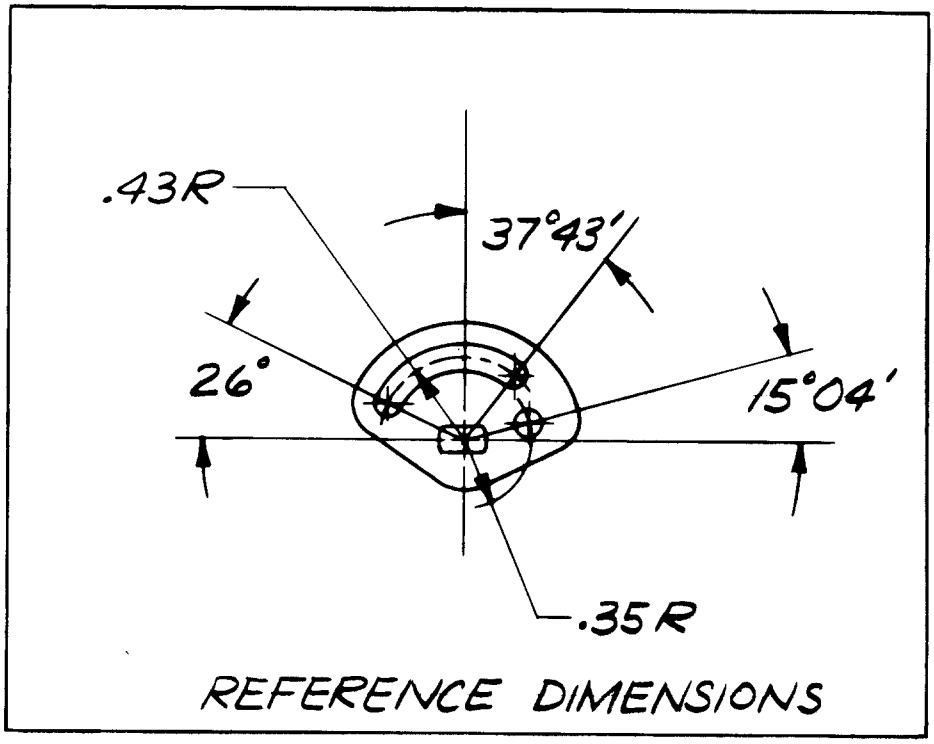

3. If there are no more than two holes being dimensioned, the reference dimensions may be shown in the body of the drawing instead of adding the view.

4. The reference dimensions should be the mean dimensions as required by the customer. The coordinate dimensions should be calculated from these dimensions.

When printed, this document is uncontrolled.

DIMENSIONING

F. The hole size before tapping is not specified when dimensioning a tapped hole.

1. The drawing callout for thru holes is as follows:

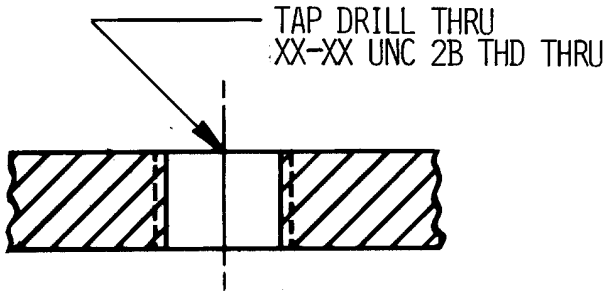

2. The drawing callout for other than thru holes is as follows:

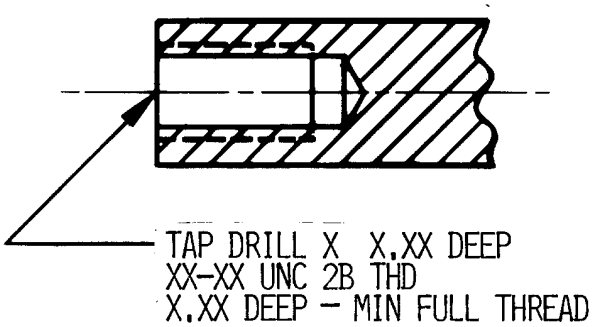

G. When a dimension line must be foreshortened, because of lack of space, either one of the following methods is acceptable. (only one method should be used throughout the drawing)

The double arrowhead or broken line must be on the foreshortened side of the dimension.

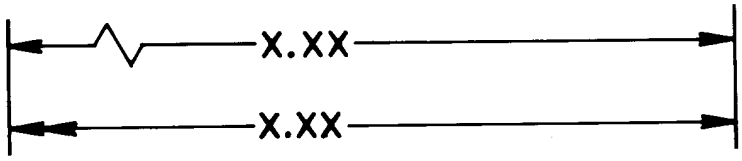

On experimental drawings, only, the following method is also acceptable.

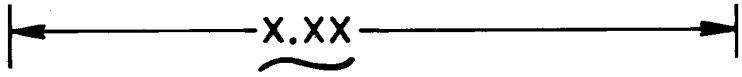

When printed, this document is uncontrolled.

DIMENSIONING

H. The following rules may be used for indicating draft when any dimension applies to one or more surfaces or features.

a. When a dimension applies to a surface and/or feature and a hole centerline, the draft symbol is indicated as follows.

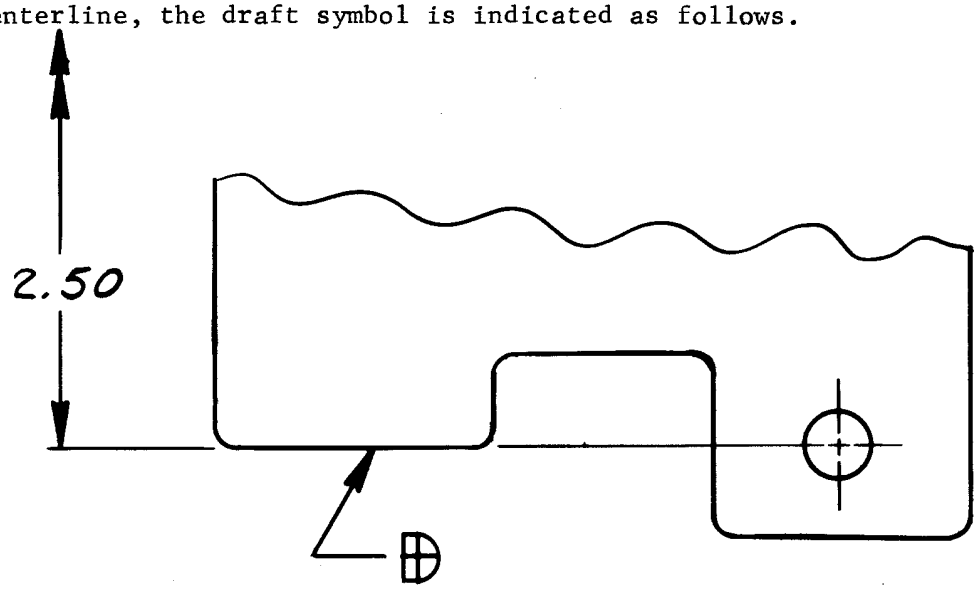

b. When a dimension applies to two or more surfaces and/or features, the draft symbols are indicated as follows.

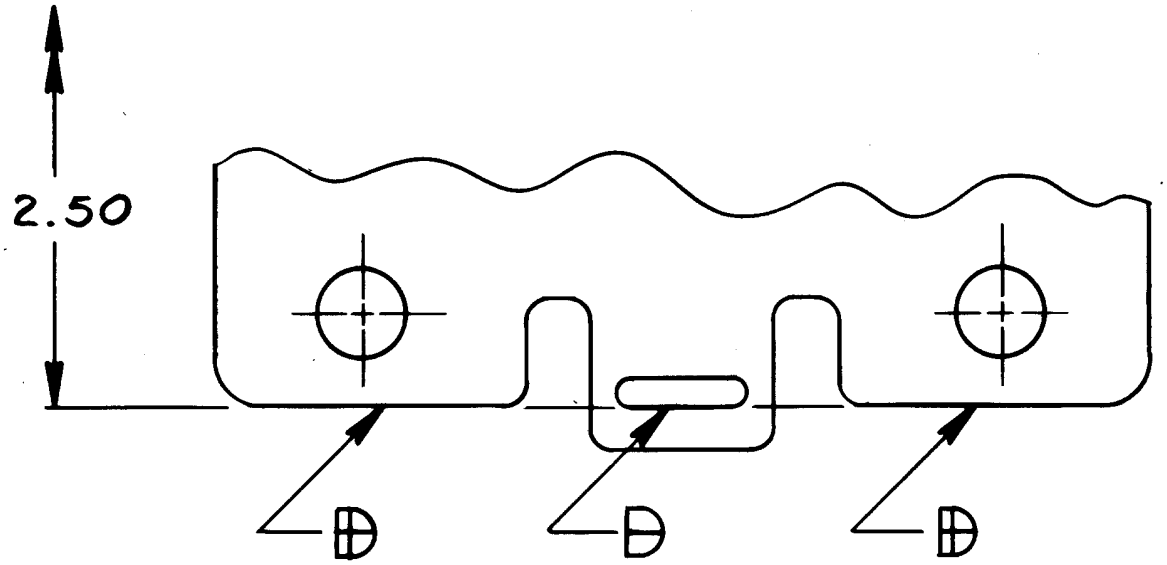

DIMENSIONING

J. The following is an example showing a proper application of the triangular symbol.

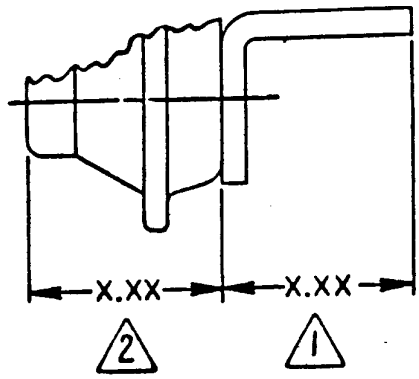

1 DIMENSION FROM BRACKET SURFACE

2 DIMENSION FROM COVER SURFACE

K. When brackets [ ] are used in the body of the drawing, the dimension, R (radius), dia. or Ø (diameter) and the tolerance should appear within the brackets.

Examples: [Ø0.25 ± 0.15] [0.25 ± 0.15 DIA] [0.25 ± 0.15 R]

L. DIMENSIONAL LOCATION OF PORT PUNCHING

On all carburetor and TBI units. Place the dimension for the location of the port punched hole or feature, from the top of the valve at the centerline of the bore, to the top edge of the port punched hole.

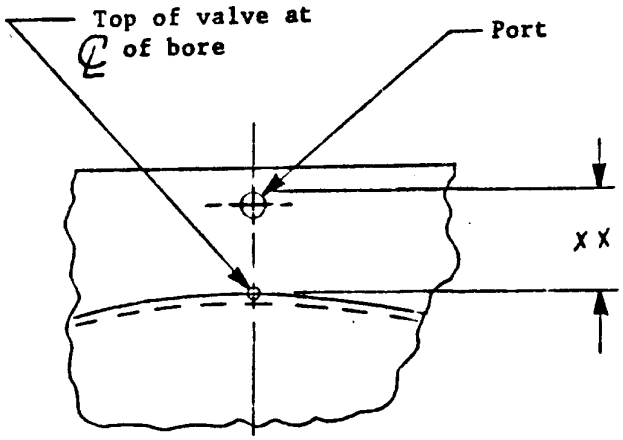

DIMENSIONING

M. DIMENSIONING OF ELEC. TERMINALS

1. OUTLINE DRAWINGS: When the terminal mates with an allied (GM) part such as a Packard Electric connector, the terminal dimensions should not be shown. Instead, the connector number should be shown in note form. Example: This terminal to connect with Packard Electric Female Terminal # _____ and Packard Electric Connector # _____.

2. ON COMPONENT DRAWINGS (solenoids, etc.)

   a. When a terminal is an integral part of a unit (Example: built into the unit, not connected with a wire), it must be fully dimensioned. The connector number must also be shown in a note as described in (1) above.

   b. When the terminal is not an integral part of the unit and the connector is an allied part number, general outline dimensions only should be shown. The connector number must also be shown in a note as described in (1) above.

3. OUTLINE AND COMPONENT DRAWINGS: On both outlines and component drawings, non-allied connectors must be fully dimensioned.

N. The recommended practice for dimensioning radii with specified centers is illustrated below.

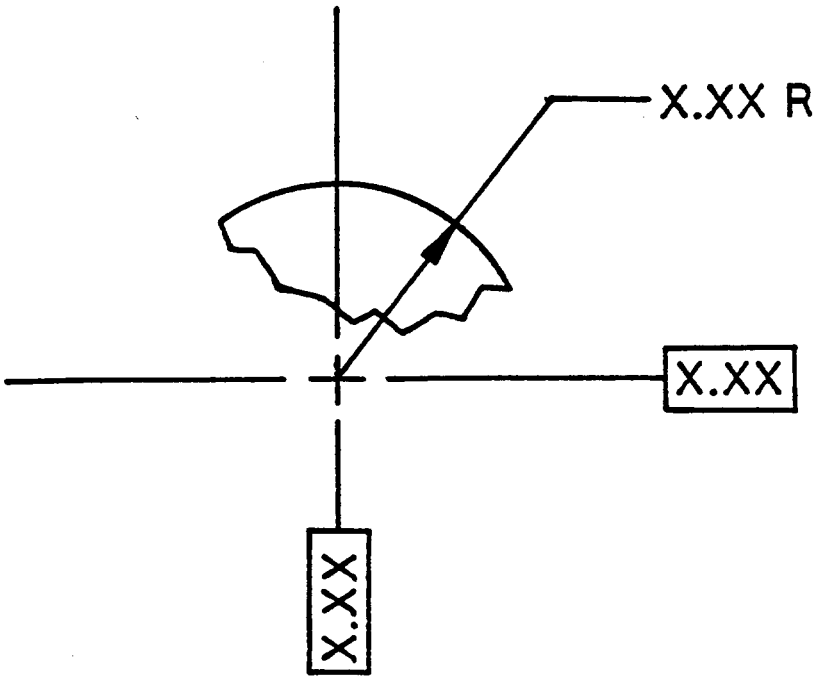

When printed, this document is uncontrolled.

DIMENSIONING

O. DUPLICATE DIMENSIONING is permissible when dimensioning an area that is critical and where by leaving out the dimension, the intent would not be clear. The dimensions will be labeled DUP DIM.

P. DRAFT for through holes will apply beginning at the surface where the size dimension is shown. See Delphi Design Standards, Section B1.

Q. FORMER PRACTICE: The following is an example of dimensioning showing the proper use of the non-geometric positional tolerance.

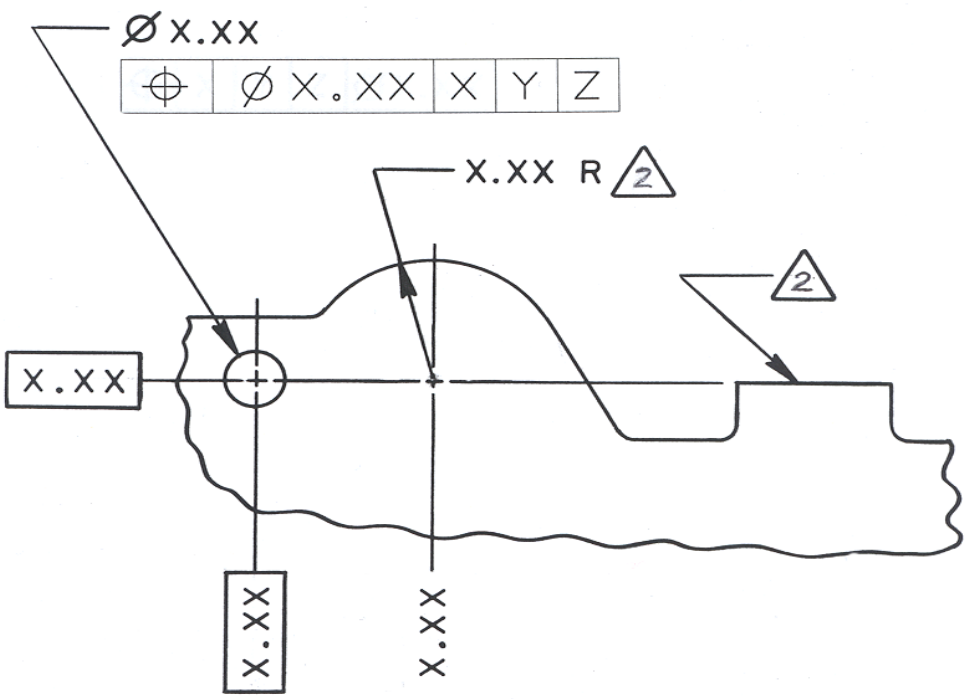

The following note must appear on any drawing where the triangle symbol is used to specify a non-geometric positional tolerance. The number of the note should appear in the triangle symbol.

2 POSITIONAL TOLERANCE FOR SURFACES OR CENTERLINES OF RADII INDICATED IS ± X.XX FROM THE BASIC DIMENSION

GENERAL RULES

A. All parts with a “D” hole must be positioned on the drawing with the flat sides parallel with the top and bottom edges of the format. All other parts should be positioned on the drawing with either the horizontal or vertical centerlines passing through the mounting hole and at least one additional feature.

B. All casting drawings should be drawn a minimum of two times size.

C. Assembly and Customer(Outline) Drawings

1. Production Drawings

   a. Production Drawings will have part names called out (not part numbers).

   b. Exception: When specifically requested by the customer, part numbers may be called out along with part names on an outline drawing. When this is necessary, the parts list must include the following note: CHANGES TO PRODUCT STRUCTURE ALSO AFFECT OUTLINE DRAWING.

2. Experimental drawings will have part names and part numbers called out. This applies to Development Released and Prototype Released drawings, with the exception of customer (outline) drawings.

3. Parts lists shall not be placed on assembly drawings, and should not be placed on customer (outline) drawings unless specifically requested by the customer.

D. Draft is not to be shown on manual or 2D CAD data drawings of cast, molded or forged parts. Draft is shown on drawings produced from 3D CAD (virtual part) data. Any exception to this rule must be approved by the appropriate design supervisor.

E. When an isometric (or similar pictorial) view is shown, its orientation must agree with the orthographic view orientation.

EMI (ENGINEERING MANUFACTURING INSTRUCTIONS)
(Also see section B page 1.7.2 and E025NY)

A. EMI's require engineering release. (REF. B - 2.1.2).

B. EMI-1, 116 must appear on all part and assembly drawings.

C. If an EMI is specified and it refers to a procedure which affects a part in a general way, it shall be added to the EMI entries in the format.

D. If an EMI refers to a procedure which is to take place in a specific area of a part, that EMI should be shown in the pictorial area of the drawing with a leader pointing to the specific area affected. (REF. SECTION B - 1.4.1).

E. The EMI INDEX is affected when an EMI is released or obsoleted. In these cases:

1. Obtain the original INDEX SHEET from ETDM.

   a. RELEASE:

      Mark up a copy showing EMI number, description (title), and released by (CN and date). The status column is left blank.

   b. OBSOLETE:

      Mark up a copy and fill in the status column with OBSOLETE NOT USED, CN and date.

2. Deliver marked up copy and original to ETDM for processing.

3. Pick up completed INDEX SHEET from ETDM.

   In cases where the old original will not be used, write OBSOLETE-REVISED & RETYPED along with CN and date in RED across the top of the sheet.

4. Include the new original INDEX SHEET and the old INDEX SHEET, if applicable, in the change package.

NX

NOTE: In the following paragraphs, Data Creation Standard is a short form of Delphi Electronic Math Model and Drawing Data Creation Standard.

A. Part File Organization

1. A part file must contain only one assembly or part.

2. All model geometry is to be created utilizing a key reference point as described in the Data Creation Standard.

3. Any layer that contains entities of any type must be labeled with a brief category name as well as an explanatory description.

B. Non-physical (or non-math) Change-FORMER PRACTICE

1. In cases where it is necessary to advance the revision level of a geometry file, but not the associated drawing file, this will be recorded in the Designer's Log (or equivalent) section of the File Log as a non-physical change in the following format: [rev number] – [date] [EWO/PEM number] [description of change]. Examples of a non-physical change are adding a reference set and adding an attribute. The design, geometry, and drawing must not be affected.

C. Other Requirements

1. All model and view geometry must be UNBLANKED when the file is approved in Teamcenter Engineering. This does not pertain to margins for ordinate dimensions, or to EDIT VIEW ERASE within views.

2. The single view layout IND, when present, must be visible when a part file is archived and closed.

D. Springs and Screw Threads

1. Springs should be represented in a simplified form at the discretion of the designer, with ends modeled when necessary for definition. Springs may be fully modeled only if there is a definite, specific need for such a model in a downstream application.

2. Screw threads should be represented in a simplified 3D form at the discretion of the designer. Screw threads may be fully modeled only if there is a definite, specific need for such a model in a downstream application.

E. Draft and Blends

1. NX 3D model geometry will include the following:

MANDATORY:

1. Draft, with the exception of included draft, which will not be modeled unless critical.

2. Critical and/or custom blends.

OPTIONAL: Fillets and Rounds - ordinary internal and external radius blends.

These optional blends become mandatory when it is know that they are necessary for certain uses of the model, such as automated inspection, stereolithography, stress simulation.

2. It is understood that the NX software simply will not produce some desired blends.

3. The NX user must exercise good judgment in devoting time to creating difficult blends.

4. Exceptions for specific product requirements shall be documented and approved by the responsible supervisor.

F. Drawings

1. To reduce the number of sheets in a multisheet drawing.

a. On the sheets being removed, record OBSOLETE REVISED AND REDRAWN. Also see Item c. below.

b. On sheets that become a different sheet number, record REVISED AND REDRAWN (with revision symbol) and remove the revision history. Also see Item c. below.

c. If a sheet remains but with a different sheet number **and** its former sheet number will not longer exist, it must first be plotted with the OBSOLETE REVISED AND REDRAWN recording, and then renumbered with the revision history removed and the REVISED AND REDRAWN recording added. Because there may be no CAD history of the obsoleted sheets (see Item e. below), it is very important that the plot be obtained before the sheets are renumbered.

d. On sheet one, record WAS SHEET 1 OF X. (This may be in addition to REVISED AND REDRAWN.)

e. Obsolete sheets may be either retained in the UG file or deleted. If retained, they must be renamed as obsolete, e.g. OBS-SH2.

NX CHECKLIST

The following checklist is a guideline to be considered for every NX file before the file is approved in Teamcenter Engineering. Each item will be checked off to indicate positive completion. Some items do not apply to all files.

DCS = Delphi Math Model and Drawing Data Creation Standard

1. FILENAME ref. DCS Section A3

- ☐ Standard object name.
- ☐ Dataset context corresponding with content, when required. (DWG, ENV, DEF, etc.)

2. LAYER ASSIGNMENT also ref. DCS Section A3

- ☐ All miscellaneous, non model-related geometry on layer 249 and not selectable.
- ☐ All layers selectable (except 249).
- ☐ All layers with entities included in at least one category.

3. COLLECTOR USAGE ref. DCS Section A3

Reference Sets
- ☐ Appropriate data per collector.
- ☐ Standard names.
- ☐ No user-defined names.

Categories
- ☐ Standard names.
- ☐ User-defined names, if used, begin with underscore (_).

Component Entities
- ☐ Standard names.
- ☐ Minimum reference sets present.

NX CHECKLIST

4. BLANKED DATA ref. TCR Design Drafting Standards, Section C

- ☐ All data unblanked.

5. VIEW NAMING

- ☐ System defined views left intact and in original position.
- ☐ Layers in system defined views set to global
- ☐ Standard drawing sheet names.

6. DIMENSIONS

- ☐ All dimensions associative to model geometry.
- ☐ All dimensions on layer 251.

7. VIEW DEPENDENT

- ☐ All view dependent geometry on layer 250.
- ☐ No view dependent geometry in system defined views.

8. SHADING

- ☐ All shading turned off.

9. SURFACE U & V GRIDS

- ☐ U & V grids set to zero.

10. SYSTEM DEFAULTS

- ☐ All system defaults set back.

NX CHECKLIST

11. DRAWING

- ☐ Title block filled out.
- ☐ Appropriate signatures.
- ☐ Correct revision record.
- ☐ Designated Characteristics. (KPC, QCI)

12. SOLID VALIDITY ref. DCS Section A3

- ☐ Run Examine Geometry.
- ☐ Part cleanup done.

SITE DEFINED REFERENCE SETS

_DWGVIEWnn — Either:

1. 3D geometry used to define content of chart figure views, with corresponding identification number.

Or:

2. 2D geometry from special feature files used as view content on drawings.

_Snn — For a purchased or fabricated assembly, geometry of a component part used to detail that item of assembly on a sheet of the assembly drawing. Numbered, beginning with 01.

_MISCnn — Data required for a specific use when one of the other standard reference sets is not appropriate. Numbered, beginning with 01.

Reference Set Name	Used In		Created in Master Math		
	Drawing	Master Math	Part	Asm	Mdata (legacy)
DRAW	✓		✓	✓	✓
REP		✓	✓	✓	✓
MATE		✓	✓	✓	✓
PART	✓	✓	✓	✓	✓
_DWGVIEWnn	✓		✓	✓	✓
_Snn	✓			✓	✓
_MISCnn	✓	✓	✓	✓	✓

CAD - GENERAL

A. PLOT SIZE

1. **Reference Prints:** Whenever practical, reference prints should be plotted at a reduced size. This will save paper and avoid confusion in determining which plot of the drawing is the “original”.

2. **For Microfilming:** Drawings to be microfilmed will be plotted full size, with the exception that E/A0 size will be plotted at .7 scale. This will save paper and make the filming process more efficient.

PART NUMBERS

A. All product model and part numbers will begin as experimental, non-production part numbers. The numbers will consist of nine consecutive places, including eight digits followed by one letter. The letter is the design level identifier (DLI). Such a number may be referred to as a suffix part number (SPN). When a part number is officially released for production, the DLI is deleted from the part number, leaving an eight digit production released part number. A series of numbers with the RP prefix may be used to identify non-part items.

B. Experimental Part Numbers

1. Experimental model numbers will be assigned in GES. The same is true for experimental part numbers for detail parts and assemblies.

2. The experimental part number will include the following elements:

   a. The first eight digits will be the basic part number, drawn from the Delphi allocation of part numbers. Example: 28059999.

   b. The ninth place will be a letter. This letter is the Design Level Identifier (DLI). Examples: A, B, etc. except I, O, Q, S, X, and Z.

3. The experimental part number will always include both elements. The DLI is part of the part number. It identifies the level or stage of development specified by the drawing. All experimental part numbers will originate at level A. The design level can be changed only when properly authorized. In the following examples, A and B are the DLI. Examples: 28059999A, 28059999B.

<u>NOTE THIS EXCEPTION</u>

Delphi model numbers for the Saturn Corporation will be supplied by Saturn. They will be 10 place numbers including:

a. The first eight digits, the basic part number, will be supplied by Saturn from its allocation of General Motors numbers. Example: 21099999 (not assigned, illustration only).

b. The ninth and tenth places will be letters, the DLI for Saturn only. EXAMPLE: AA, AB, etc.

This exception applies to Saturn model numbers only. Example of Saturn experimental model number: 21099999AB. (Not assigned, illustration only.) Delphi components of Saturn models will be numbered with nine place experimental part numbers, as described above.

PART NUMBERS

C. Production Release of Part Numbers

1. When a part is officially released for production by approved CR/CN, the design level identifier will be removed from the part number. The original eight digit, basic part number will then become the production released part number.

2. The CR/CN will have attachments showing prints of drawings to be released. These prints will have approval signatures per E120NY.

D. Production Status of a Part Number

The production status of a part number is determined as follows:

1. If the part number includes a design lever identifier, it is a pre-production part number.

2. If the part number does not include a design level identifier, it is a production released part number.

3. Inquire on the part in GES. The Design Stage field will indicate the current status of the part.

E. Inclusion of Drawing Revision Symbol in Part Number Callout

1. Complete definition of a part requires that the appropriate drawing revision symbol be included when specifying or referring to the part number. A revision symbol identifies a part drawing revision. Drawing revision symbols are listed in the SYM column of the REVISION BLOCK. The design level identifier is included in the part number of an experimental drawing. Any history of design level change is also listed in the REVISION BLOCK on an experimental drawing and retained in the record if the part is production released.

2. All written and verbal references to a part should also include the part number followed by the abbreviation for the word revision, REV, followed by the appropriate revision symbol.

   The following are examples of experimental part numbers including revision symbols: 17099998A REV 1,17099998A REV 2, 17099998A REV 25

   The following are examples of production part numbers including revision symbols: 17099999 REV 1, 17099999 REV 2, 17099999 REV 25